Service manual

4-way cassette fan coil unit

AFC-300CA/4BA

AFC-400CA/4BA

AFC-500CA/4BA

AFC-600CA/4BA

AFC-800CA/4BA

AFC-1000CA/4BA

AFC-1200CA/4BA

AFC-1400CA/4BA

Contents

Contents 2

Part1 General information 3

Part2 Features 5

Part3 Dimension 6

Part4 Sound level 9

Part5 Electrical Principle Diagram 10

Part6 PCB instruction 11

Part7 Installation 12

Part8 Product selection 19

Part9 Controller 21

Part10 Trouble Shooting 24

Update the record table ..... Error! Bookmark not defined.

Part1 General information

1. Nomenclature

Indoor Unit

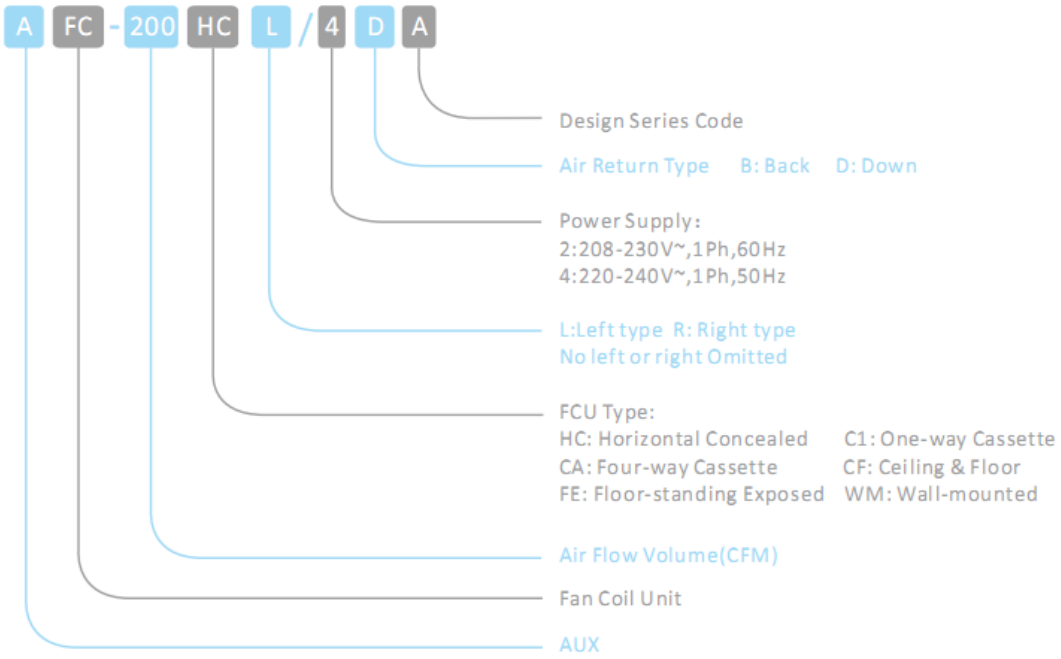

2. Unit appearance

2.1 Cassette

Model	Air flow volume H/M/L （CFM）	Dimenssion (mm)	Appearance	Type	Power supply
AFC-300CA/4BA	300/259/212	570×570×260		E series	220-240V,50,1
AFC-400CA/4BA	400/341/282				
AFC-500CA/4BA	500/429/353				
AFC-600CA/4BA	600/450/300	835×835×250			
AFC-800CA/4BA	800/600/400				
AFC-1000CA/4BA	1000/750/500	835×835×290			
AFC-1200CA/4BA	1200/900/600				
AFC-1400CA/4BA	1400/1050/700				

Part2 Features

1. Fire-proof electric control box
Integrated electric control box, the E-box is safely covered by metal plate, for better fire-resistance

2. Fresh air intake (600-1400 CFM)
Fresh air makes indoor air healthy and comfortable

3. Built-in water pump
The built-in drain pump can lift condensing water up to 700 mm (300/400/500CFM) /1200mm(600/800/1000/1200/1400CFM)high from drainage pan.

4.Optional panels and grills
Four way cassette panel (Optional 3 grills)
Round way cassette panel (Optional 4 grills)

Part3 Dimension

1. AFC-300CA/4BA、AFC-400CA/4BA、AFC-500CA/4BA

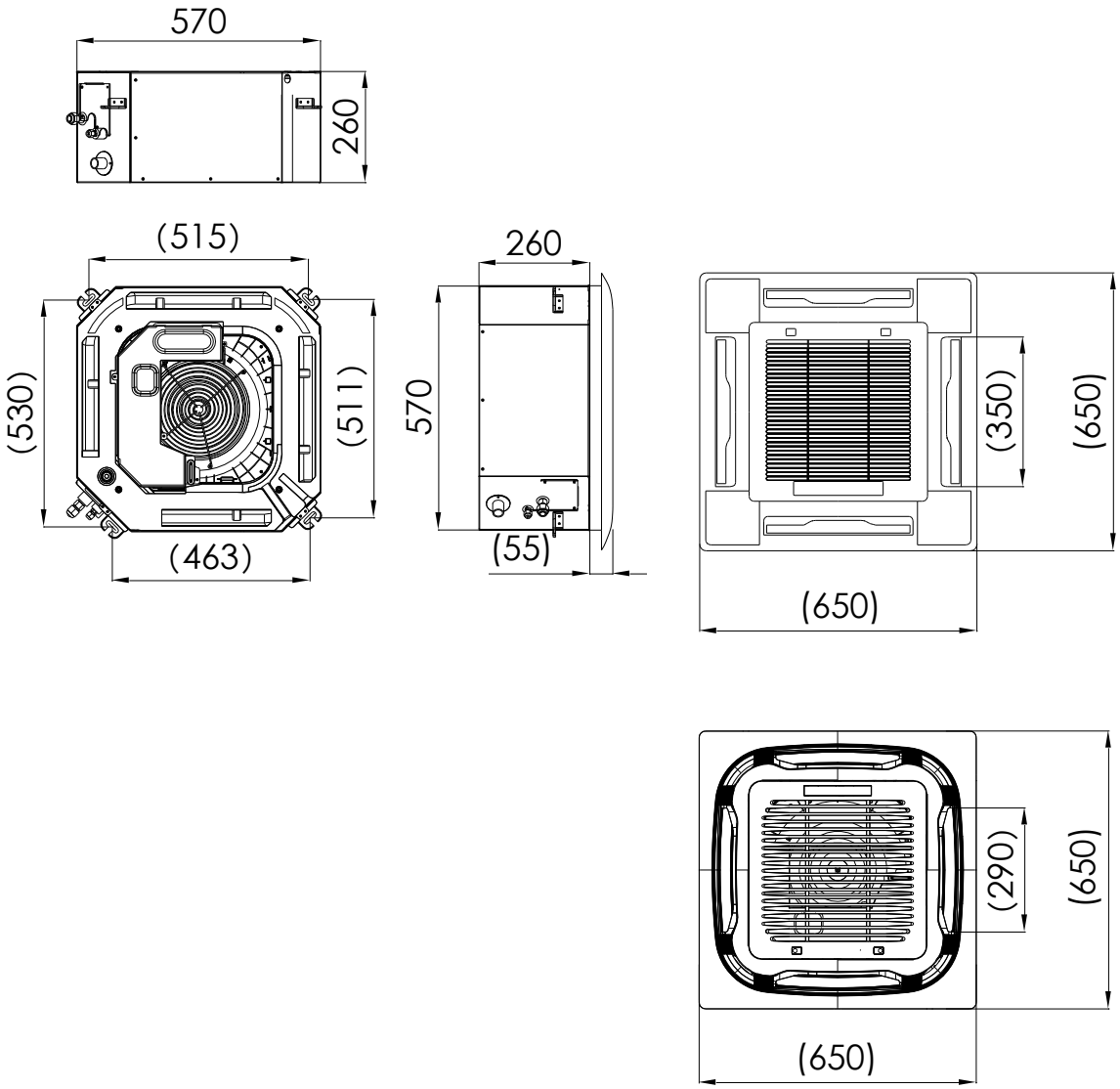

2. AFC-600CA/4BA、AFC-800CA/4BA

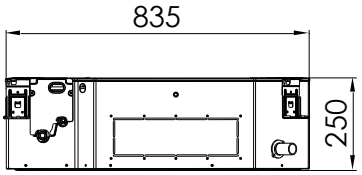

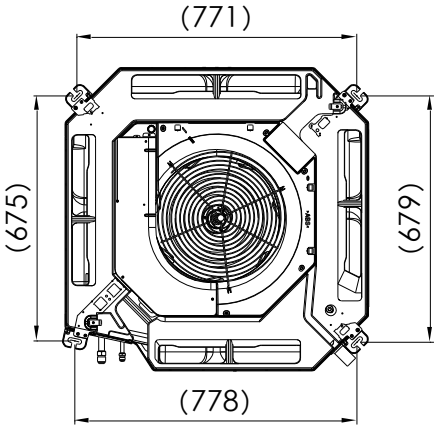

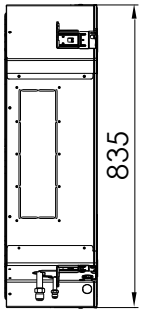

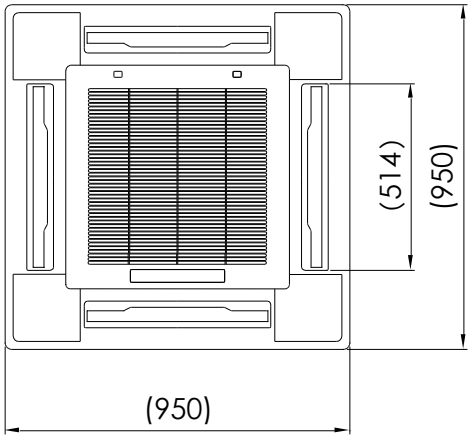

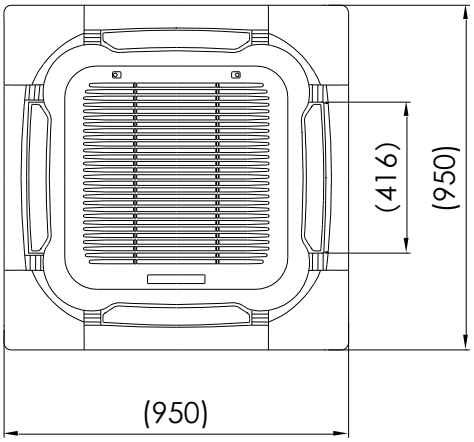

3. AFC-1000CA/4BA、AFC-1200CA/4BA、AFC-1400CA/4BA

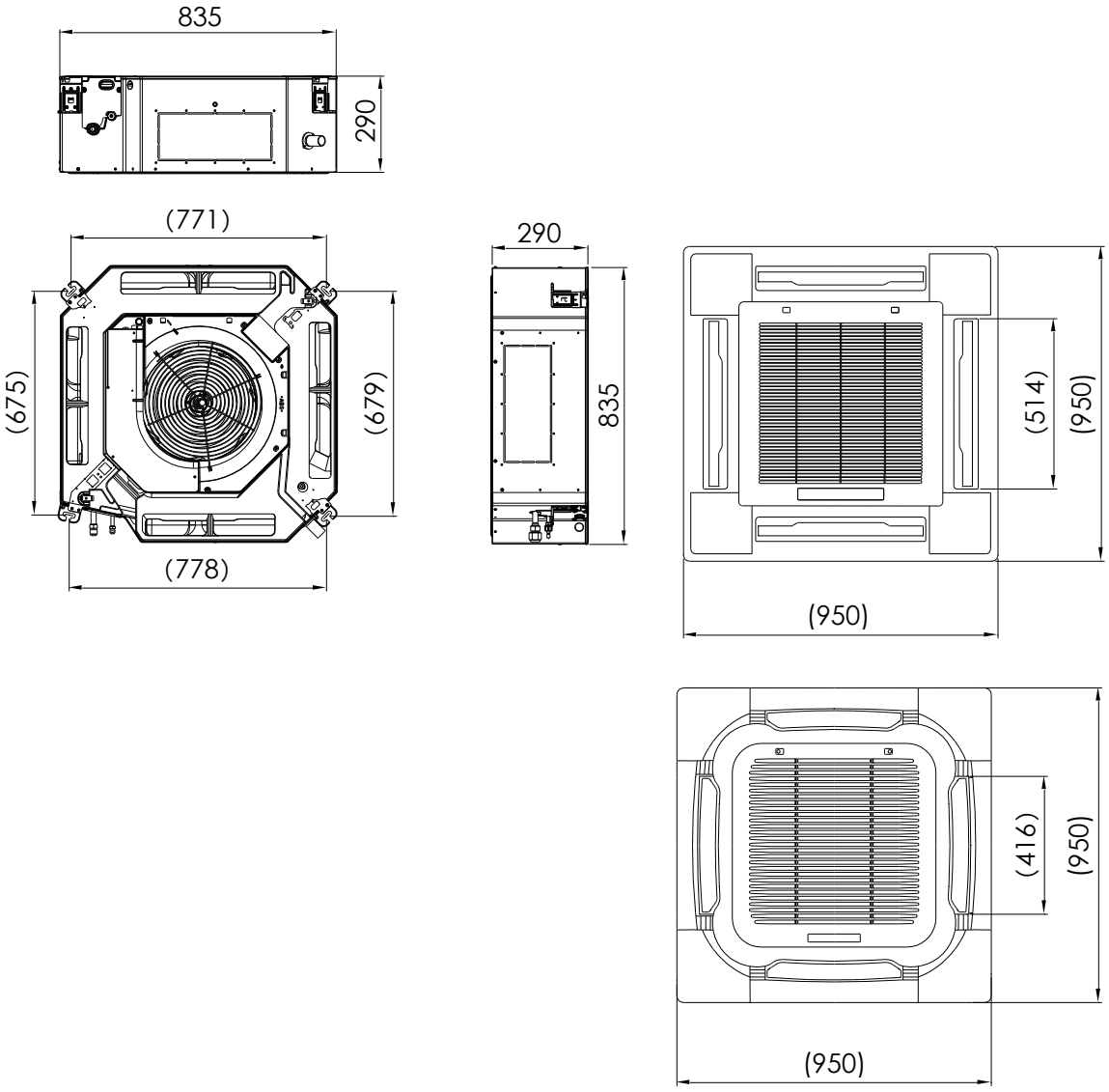

Part4 Sound level

1. Test condition

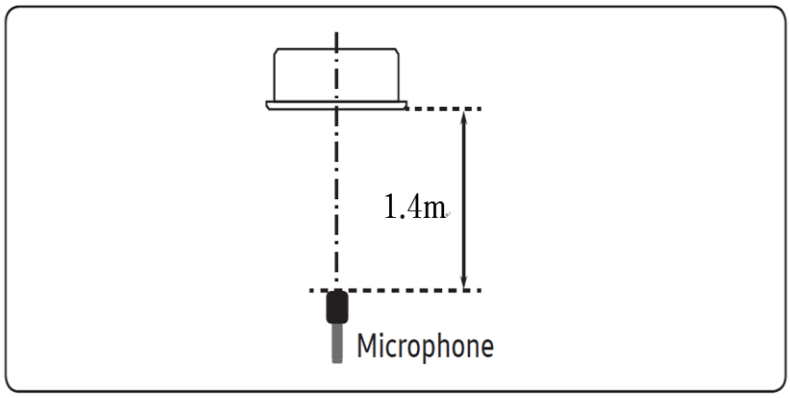

2. Test Value

Models	Noise level (dB(A))
AFC-300CA/4BA	≤39
AFC-400CA/4BA	≤42
AFC-500CA/4BA	≤45
AFC-600CA/4BA	≤45
AFC-800CA/4BA	≤46
AFC-1000CA/4BA	≤48
AFC-1200CA/4BA	≤50
AFC-1400CA/4BA	≤52

Part5 Electrical Principle Diagram

1. AFC-300CA/4BA、AFC-400CA/4BA、AFC-500CA/4BA、AFC-600CA/4BA、AFC-800CA/4BA、AFC-1000CA/4BA、AFC-1200CA/4BA、AFC-1400CA/4BA

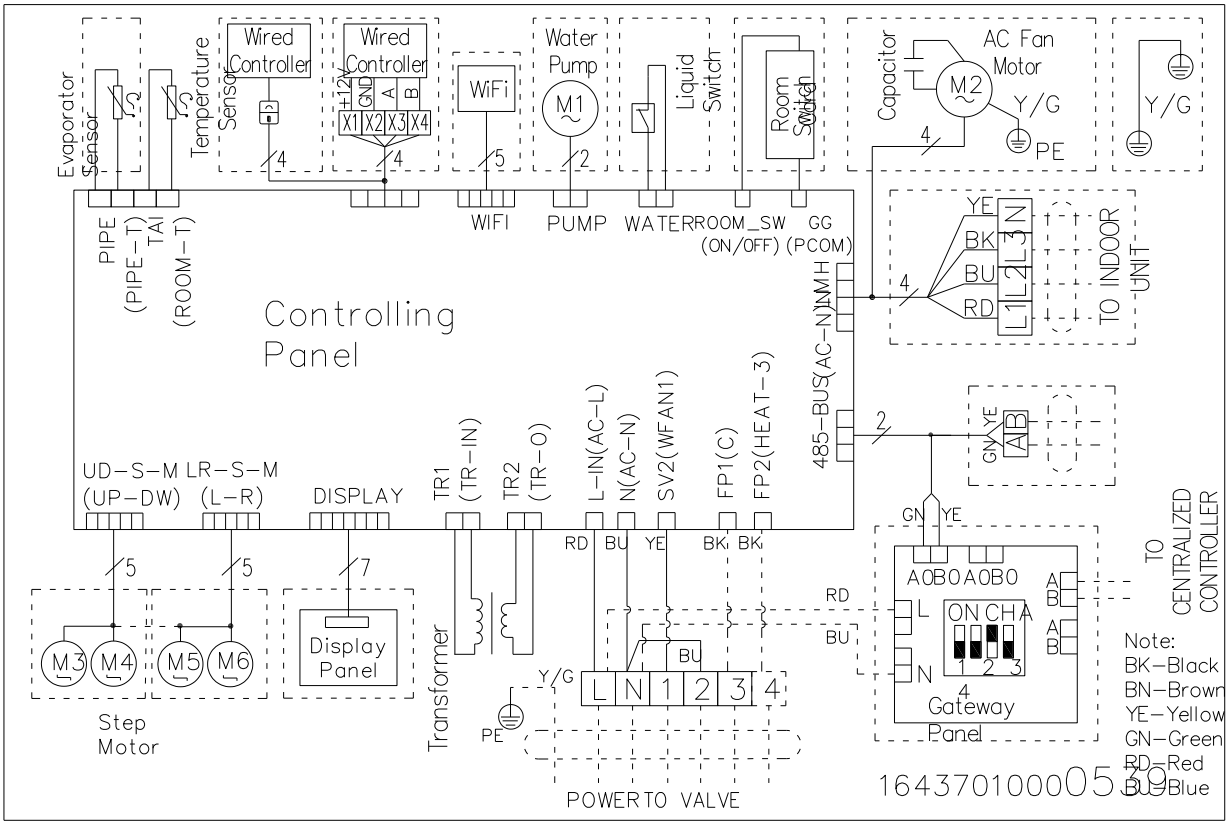

Part6 PCB instruction

AFC-300CA/4BA、AFC-400CA/4BA、AFC-500CA/4BA、AFC-600CA/4BA、AFC-800CA/4BA、AFC-1000CA/4BA、AFC-1200CA/4BA、AFC-1400CA/4BA

【Main PCB】11222541000056 CJ 控制板 FPQ-R-3F02-E1(SY)

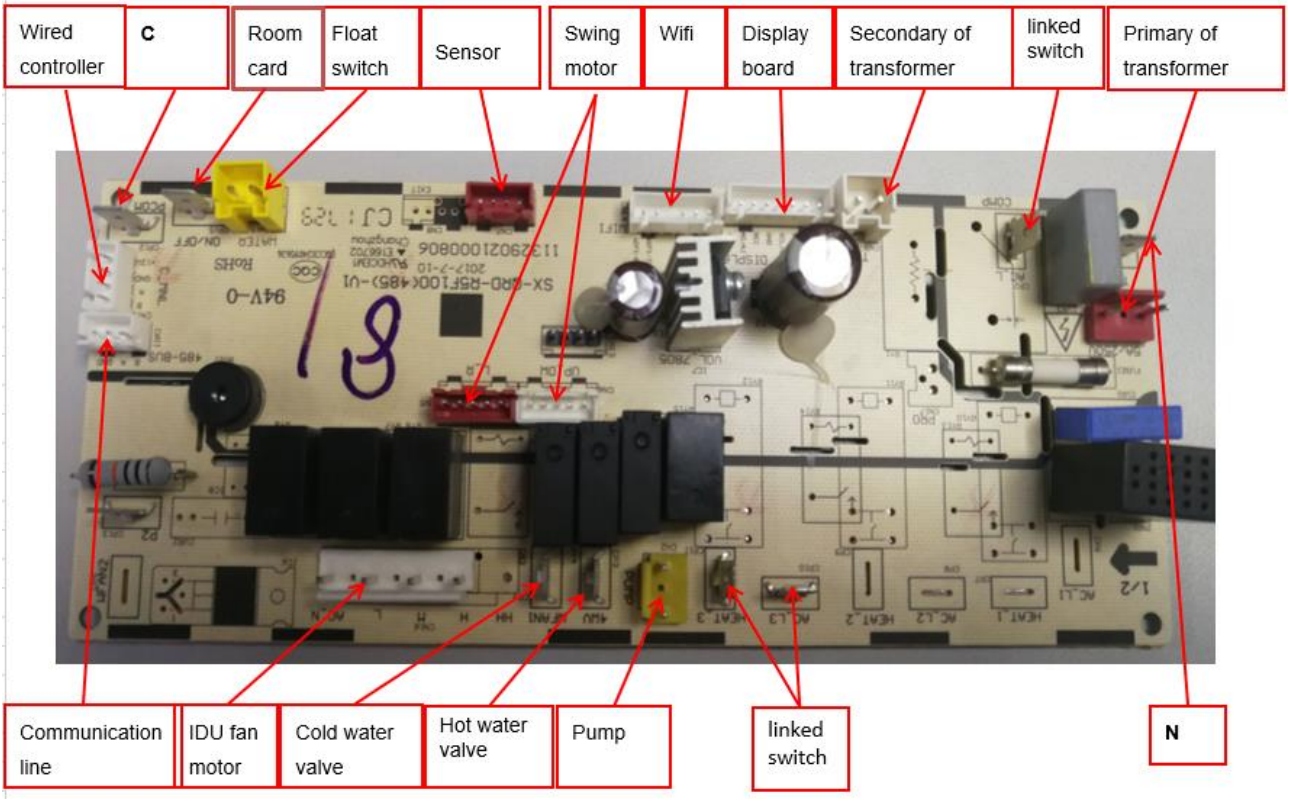

Part7 Installation

1. Preparation and equipment before installation

Preparation before installation

Please buy the following accessory parts from the market	Besides common tools, the followings are also needed.
Hung bolts M12, 4 pcs.	Two wrenches, one of them is torque spanner
Drainage pipe PVC	
Nylon cable ties (big size) 5 pcs (small size) 5 pcs.	
Power cable	

Installation precaution

◇ Hanging location should be able to support the unit's weight, there should be no increase in noise and vibration. If the hanging location needs reinforcement, it should be reinforced before installation;

◇ Choose the space above the ceiling that can put the indoor unit inside;

◇ The location should be easy for drainage;

◇ When connecting inlet and outlet water pipe, it's recommended to use flexible connecting pipe and PTFE tape for sealing with torque force no more than 205.6N.m (21Kgf.m)

◇ Inlet and outlet of water pipe should be insulated withPE foam material and equipped with valves.

◇ The water in the circulatory system should be clean,and filter needs to be installed at the water. Inlet,to prevent coil blockage,

◇ Before power on, please check if the voltage, frequency and phase of power supply comply with the requirements of unit. Voltage deviation of power supply shouldn't be over 10% of rated voltage.

◇ The inlet water temperature should be no less than 6℃ (prevent condensation)under cooling and no more than 60℃ under heating.

◇ The unit should not be installed in the heat source, steam source oil mist places (such as machine room, kitchen, laundry room, mechanical workshop, etc.) in order to avoid performance degradation, electric shock, plastic parts corrosion which lead to unit broken;

◇ Choose the location at least 1 meter away from TV and radio, in order to avoid interference to them

◇ There is no obstacles getting in the way of air circulation, cold air can evenly spread to all corners of the room;

◇ In order to facilitate maintenance and repair, there should be certain distance between indoor unit and obstacles;

2. Unit installation

The distance between indoor unit and obstacle

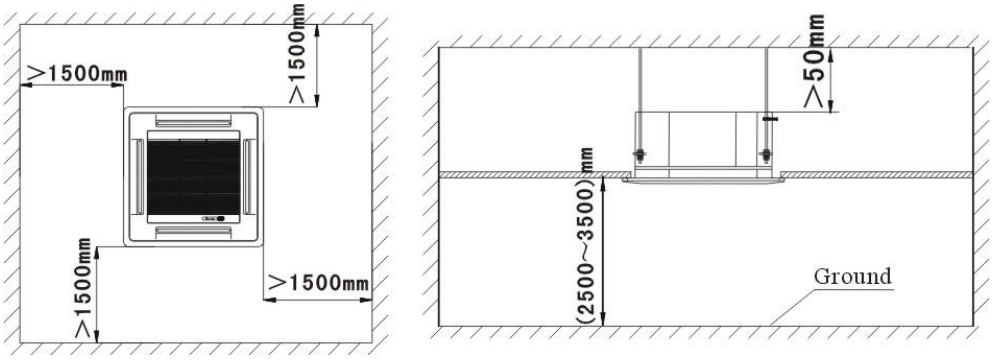

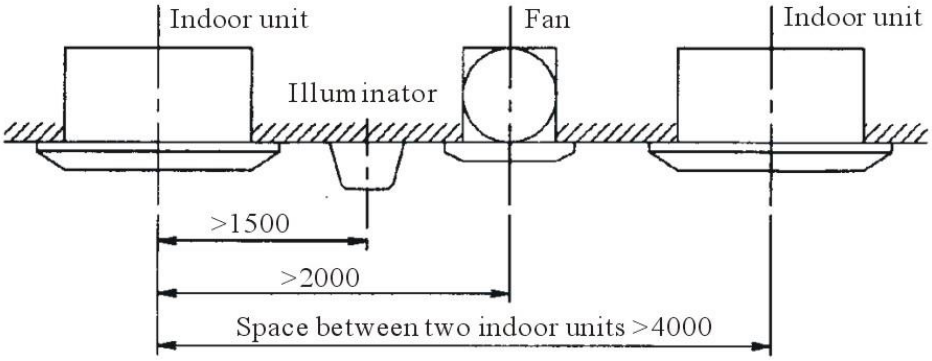

Unit suspension

◇ Select the suspension foundation:
The suspension foundation is a structure of either wooden frame or reinforced concrete. It must be firm and reliable to bear at least 4 times weight of itself and capable of bearing vibration for long periods.

◇ Fixing of suspension foundation:

◇ Fix the suspension bolts either as shown in the picture or by a steel or wooden bracket.

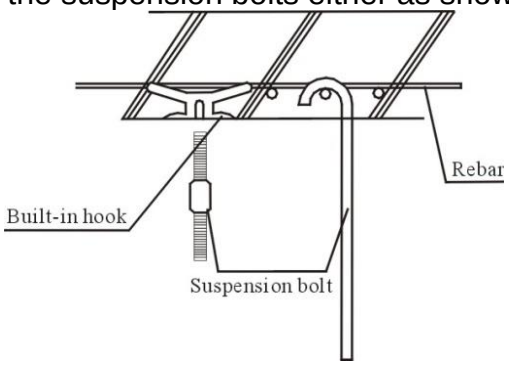

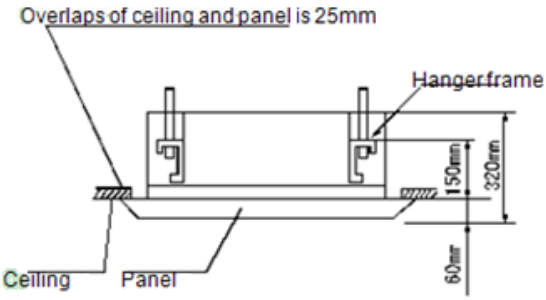

◇ If this unit is installed on a sloping ceiling, a cushion block should be installed between the ceiling and the air outlet panel, in order to ensure that the unit is installed on a level surface.This is as shown in the drawing as follows:

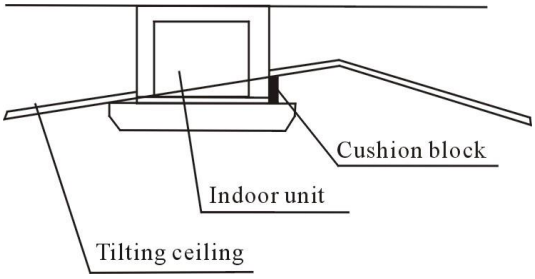

LCAC Single cassette

◇ Adjust the relative position of the suspension hook on the suspension bolt so that the unit can be in level position in all directions. Check with a level gauge after the installation is complete in order to ensure that the indoor unit is horizontal, otherwise it will cause water leakage, air leakage etc.

◇ Tighten the bolt and ensure that four hooks are in close contact with the nuts and washers, and the unit is suspended firmly and reliably onto the hooks.

◇ After the unit is installed ensure it is secure and does not shake or sway.

◇ Ensure that the centre of the indoor unit is in alignment with the centre of the opening in the ceiling.

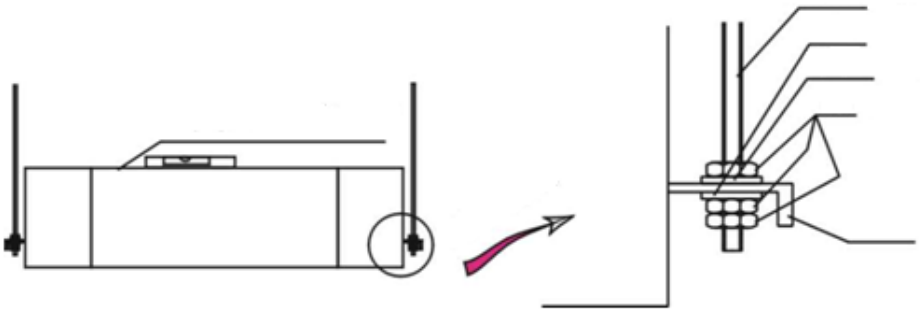

Drainage pipe installation

◇The drain pipe should be properly insulated to prevent the generation of condensation, see picture as follows:

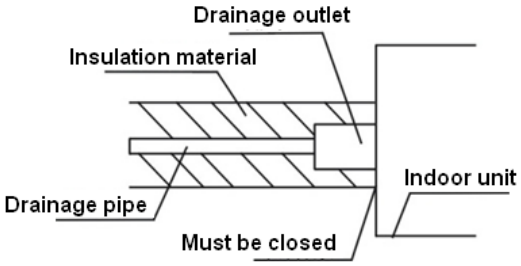

Heat insulation material: rubber insulation pipe with the thickness of more than 8mm

◇Drainage pipe must have a downward gradient (1/50-1/100).If the drain pipe is installed ups and downs, it will cause water backflow or leakage etc.

The pipe should not rise at any point.

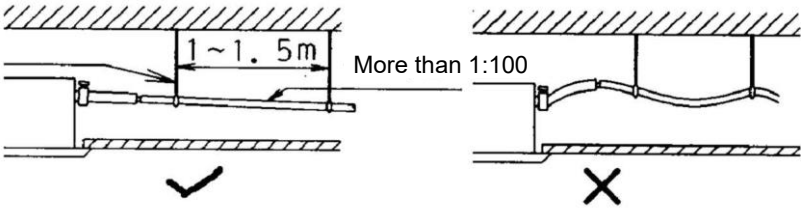

◇ The unit has a drain pump which will lift up to 1200mm. However after the pump stops the water still in the pipe will drain back and may overflow the drain tray causing a water leak. For this reason please install the drain pipe as shown

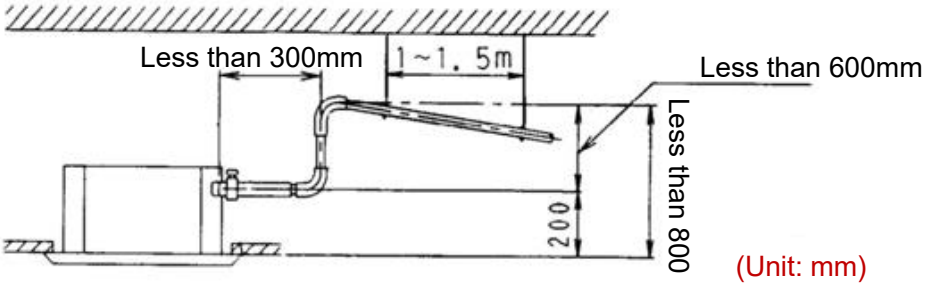

◇ When draining multiple units into a common drain line, this common drain should be installed about 100mm below each units drain outlet, as shown in the drawing.

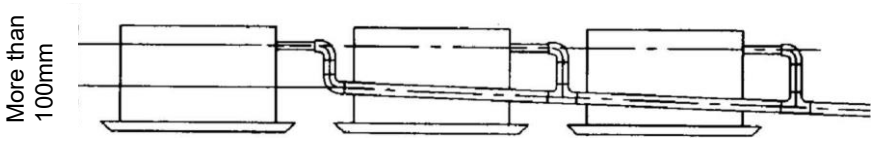

◇ When finish installation please carry out the drainage test to ensure that the water flow through the pipeline fluently, and carefully observe the junction to ensure that there is no water leakage. If the unit is installed in the newly built house, strongly recommend that this test taken before the ceiling installation. Even it is the heating only unit, this test is unavoidable.

Panel installation

As to the MB12 panel please refer to the following picture, the panel has four hooks which attach to corresponding hangers on the unit and the panel should be positioned using these first. The panel is then fixed into position by four bolts which are accessed through the four corner panels on the grille.

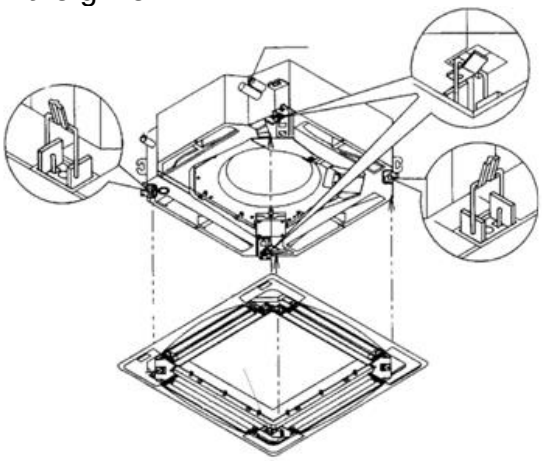

Notes:

When installing please ensure that the position of swing motor is in accordance with the position of the pipes of the unit.

3. Electrical connection precaution

Warning	Installation of electric items must be carried out by qualified, professional technicians. An isolated circuitry should be fixed with whole-pole disconnection devices, which is with at least 3mm gap of touch point. . Power supply and indoor to outdoor connection should use special cable. Providing the necessity of installation or replacement, the professional technician of service store appointed by manufacturer must be required, while self-operation by users is prohibited.
	In case of any electric shock accident, the creepage protection devices /power supply on-off and breaker must be required with power supply.
	Machine must be earthed surely. If not, it'll be probably caused creepage.
	The power cord shall consist wires of 227IEC53(RVV) type specified in GB5023 or those of equivalent grades or above . Secure the wires with fixtures, so that the terminals will not easily dislodge under external forces. Incorrect connection or fixing may cause a fire or other hazards. The internal and external connecting cable shall consist wires of 245IEC57(YZW) type specified in GB5013 or those of equivalent grades or above.
Notice	The earth line is neither allowed to connect to gas pipe, water pipe or circuitry of telephone or lighting rod, nor to the earth line of other devices.
Others	●Please connect the power cord according to the instructions of the circuit diagram. ●Securely and firmly connect the wires to the terminal holder with cable fixtures, to prevent the external forces from acting on the wires and causing dangers.

4. Commissioning

After installation, machine can be started commissioning.

Check installation condition

◇Check unit installation and wire connection in accordance with the requirement of service manual.

◇Check the power supplying, diameter of wires, air on-off and make it sure that the items can be matched with machines and, earth wire connection safety.

◇Check air inlet/outlet duct and make it sure that the items is clean, operating smoothly.

Pressure Test and Water Filling of Unit

- Before conducting pressure test of fan coil air conditioner system, it's necessary to formulate pressure test scheme and select appropriate pressure test pump. During pressure test, it's necessary to carefully record press teat status timely monitor pressure change of system.
- Pay attention to the following points when formulating pressure test scheme:
- Before filling water for coil, vent valve on collecting head must be opened and then closed until exhausting the air in coil.
- Pressure test should be conducted under air temperature conditions above 5℃, otherwise, anti-freezing measures should be taken.
- During hydraulic test, increase pressure slowly and evenly. carefully check if there is water leakage at the joint after water pump stops running and hydraulic pressure stabilizes. Don't repair in case of hydraulic pressure.
- As for water filling in the system, it's mandatory to fill water by layer, discharge by layer and test layer by layer.
- After confirming there is no leakage on pipeline of system, finally conduct thermal insulation treatment according to design scheme.
- Pressure test scheme of system should be formulated according to the principle of water-flowing from low to high and injecting water layer by layer. Moreover, the above points must be followed, otherwise, structural damage may be caused to fan coil unit and system pipeline.

Initial Operation of Unit

- Before initial operation, clear foreign matters in drip tray, fan shell and around coil, and check if installation points such as water pipe and electric wire are correct;
- Before initial operation, first shut down inlet and outlet water valves of equipment, then open inlet and outlet water valves of equipment after cleaning pipeline system of chiller water;
- In case of initial operation, open vent valve on water outlet pipe to exhaust air in coil and pipeline.
- Switch on power supply, open inlet and outlet water valves of equipment and adjust water temperature to the temperature of cooling mode;
- Set the mode at “Ventilation” (HI-FAN) mode and observe if there is strong air volume blown into the room and if there is abnormal noise of unit;
- Open “Swing” button and check if air guide blade swings normally;
- Open “Cooling” mode and observe if unit blows cool air normally and discharge water normally;
- Press other buttons of remote controller to check if unit works normally;
- After confirming unit work normally, press “ON/OFF” button to stop commissioning;
- Conduct onsite training on notices of operation and maintenance for users;

5. Daily maintenance

Clean inhaler

◇ Before cleaning the filter, ensure the unit is switched off and the power is off;
◇ Forbidden to use water clean the filter , it will hurt PCB or get an electric shock;
◇ When cleaning filter net, be sure you are standing steady, if you use ladder or others, please be careful.

Washing filter net

◇ Use vacuum or water to clean the net;
◇ In order to ensure the best performance from your air conditioner clean the air filter regularly
◇ We recommend cleaning once a month or more frequently if required.
◇ When the filter is very dirty it can be washed in detergent and hot water (below 45℃);
◇ Ensure the filter is fully dry before reinstallation to avoid risk of electric shock or short circuiting;
◇ Do not dry the filter using direct sunlight;

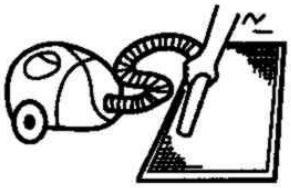

Check at the beginning of each season

◇ Check whether there are no physical obstructions at the air inlet or outlet of each unit;
◇ Check whether there are some garbage at the condensedwater outlet;
◇ Check whether electrical cables are in good condition, particularly the earth cable;
◇ When power on, check weather letters display on the screen of the controller.
◇ At the initial period of operation, clean water filter of unit weekly, and then clean every 1~2 months after one month of operation;

Check at the end of service season

◇ Operate for 2 3 hours under the ventilation condition; remove the moisture of the indoor unit.;
◇ If not use air conditioner in a long time, please keep full water in coil in summer to reduce rust corrosion and evacuate water from it in winter to prevent frost crack.
◇ Take the batteries out of remote controller;

Part8 Product selection

1. Precautions of product selection

a.At given airflow and temperature of a fan coil unit, when water supply changes, so does the cooling capacity. Based on statistics of the performance of some products, when water supply temperature is 7℃ at 80% water supply, the cooling capacity is about 92% of the original level, indicating slow effect of the water supply change to cooling capacity.

b.At given temperature difference between water supply and water return of a fan coil , the cooling capacity decreases with as the water supply temperature increases. According to statistics, if water supply temperature is increased by 1℃, the cooling capacity will decrease by about 10%, the higher the water temperature is , the greater decrease the cooling capacity will suffer, with lowered humidity capacity.

c.At given water supply condition, when the airflow of a fan coil changes, so do its cooling capacity and enthalpy difference of air treatment, which usually increases as cooling capacity decreases, without much change in power consumption of unit cooling capacity.

d.When the temperature difference between inlet and outlet water of a fan coil increases, the water flow will decrease, so will the heat transfer coefficient of the heat exchange coil. The heat transferring temperature will also change, as a result, the cooling capacity of a fan coil increases as the temperature difference between supply and return water increases. According to statistics, when water supply temperature is at 7℃ , and the temperature difference between supply and return water has increased from 5℃ to 7℃, the cooling capacity may decrease about17%..

The water supply, water supply temperature, temperature difference between supply and return water, water flow and inlet air temperature and humidity interact with one another, with the performance of the fan coil changed by the variation of any one of them.

e. When a fan coil runs at standard condition, the final point of air treatment depends on the enthalpy difference of air treatment and the cooling capacity is related to the humidity load of the room, in that the greater the heat-humidity ratio, the smaller the cooling capacity is , as shown in Figure 1. So, the air treatment enthalpy difference of the fan coil can be determined by heat-humidity ratio curve, final point parameters of air treatment and air parameters , and then the cooling capacity of the fan coil can be calculated based on the air treatment enthalpy of the room at different heat-humidity ratio...

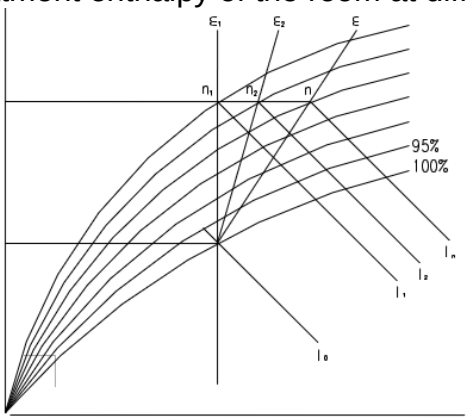

Table 1 Air treatment temperature process of a fan coil

2. Methods of product selection

Enthalpy difference correction

Make corrections based m-the ratio between the enthalpy difference during actual operation and that at standard condition, and calculate the actual cooling capacity of the fan coil, then select the correct fan coil based on actual cooling capacity.

$Q`=QH\cdot(\triangle Im/\triangle IH)=mQH$

where:Q` —— Actual cooling capacity of a fan coil（W）.

QH—— Rated cooling capacity at of a fan coil at standard condition（W）.

△Im —— Actual air treatment enthalpy difference of a fan coil（W/kg）

△IH——Air treatment enthalpy difference of a fan coil at standard condition（W/kg）

m —— Correction coefficient

Airflow based type selection

Select a fan coil based on the air conditioning flow calculated by the cooling load of air conditioning and the actual air treatment enthalpy difference of the fan coil.

$G=Q/\triangle Im\cdot(W)$

where: G——Air conditioning flow kg/h

Besides, when the water supply temperature, temperature difference of supply and return water, water supply and inlet air temperature are different than those of the standard condition, further correction is required based on the information.

Part9 Controller

1. Controller

IDU type	Controller		
	Standard	Optional	Optional
Cassette			
	YK-K	YK-H	XK-05

Remote Controller YK-K

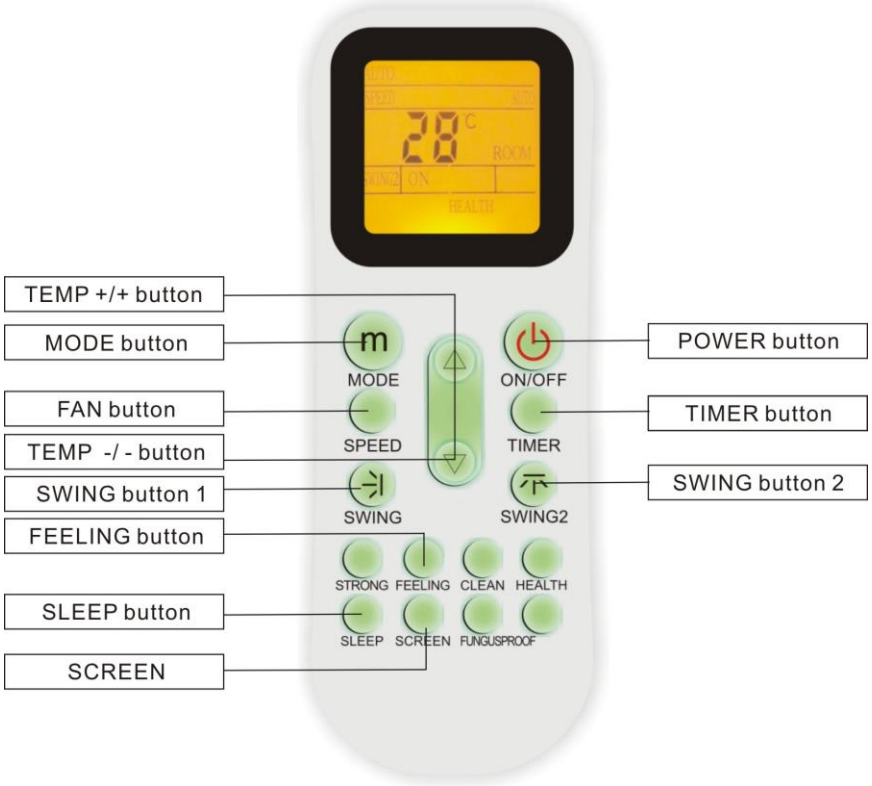

Remote Controller YK-H

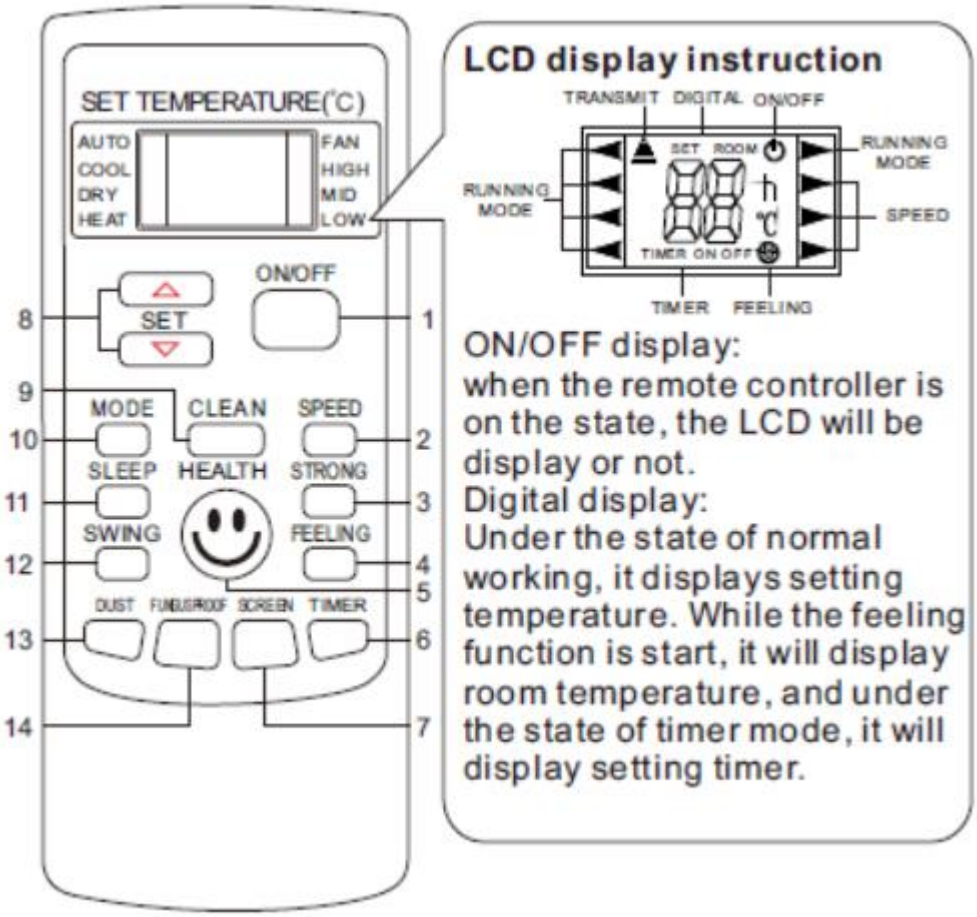

Wired controller XK-05

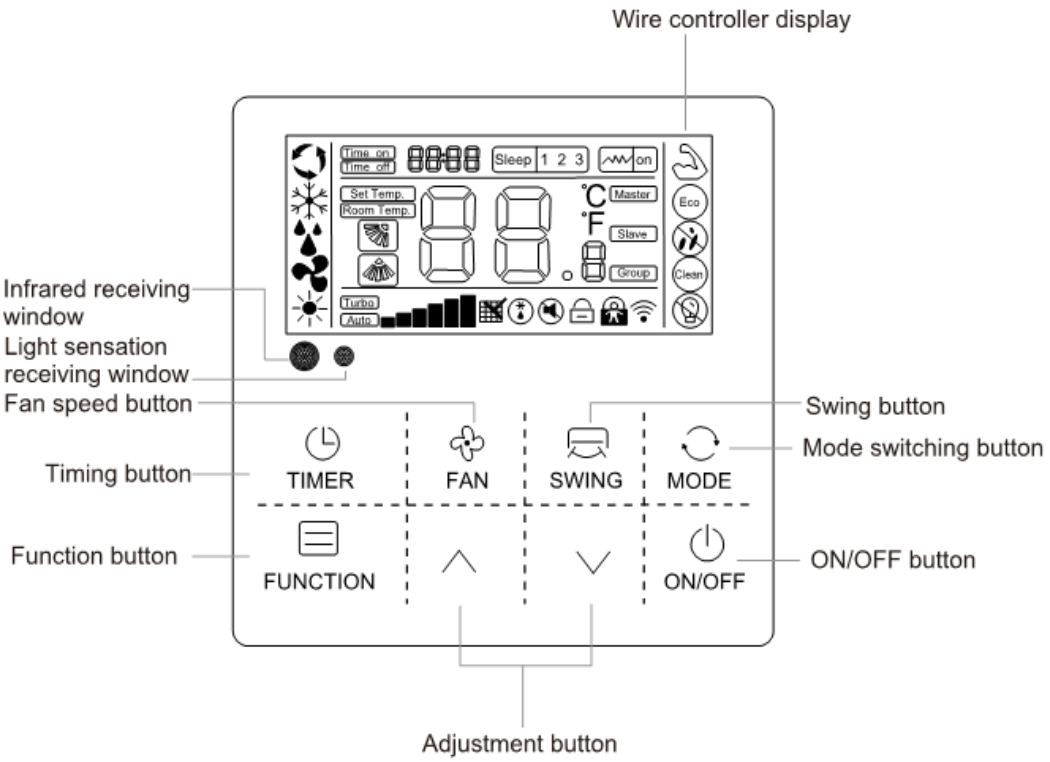

Note：For details of all the above controllers, please refer to the corresponding controller manual.

Part10 Trouble Shooting

1. Failure code display

When AC has failure, indoor display board and wire controller will show error codes

Error code	Error code definition	Problem possible reasons
E1	Return temperature sensor failure	Sensor damage
		Poor contact of sensor
E4	Drainage system failure	Damage of water pump
		Damage of water level switch
		Water level switch is locked
E5	Communication failure of wired controller	Communication wire sequence error
		Poor contact of communication wire

2. Failure analysis

Wired controller communication failure

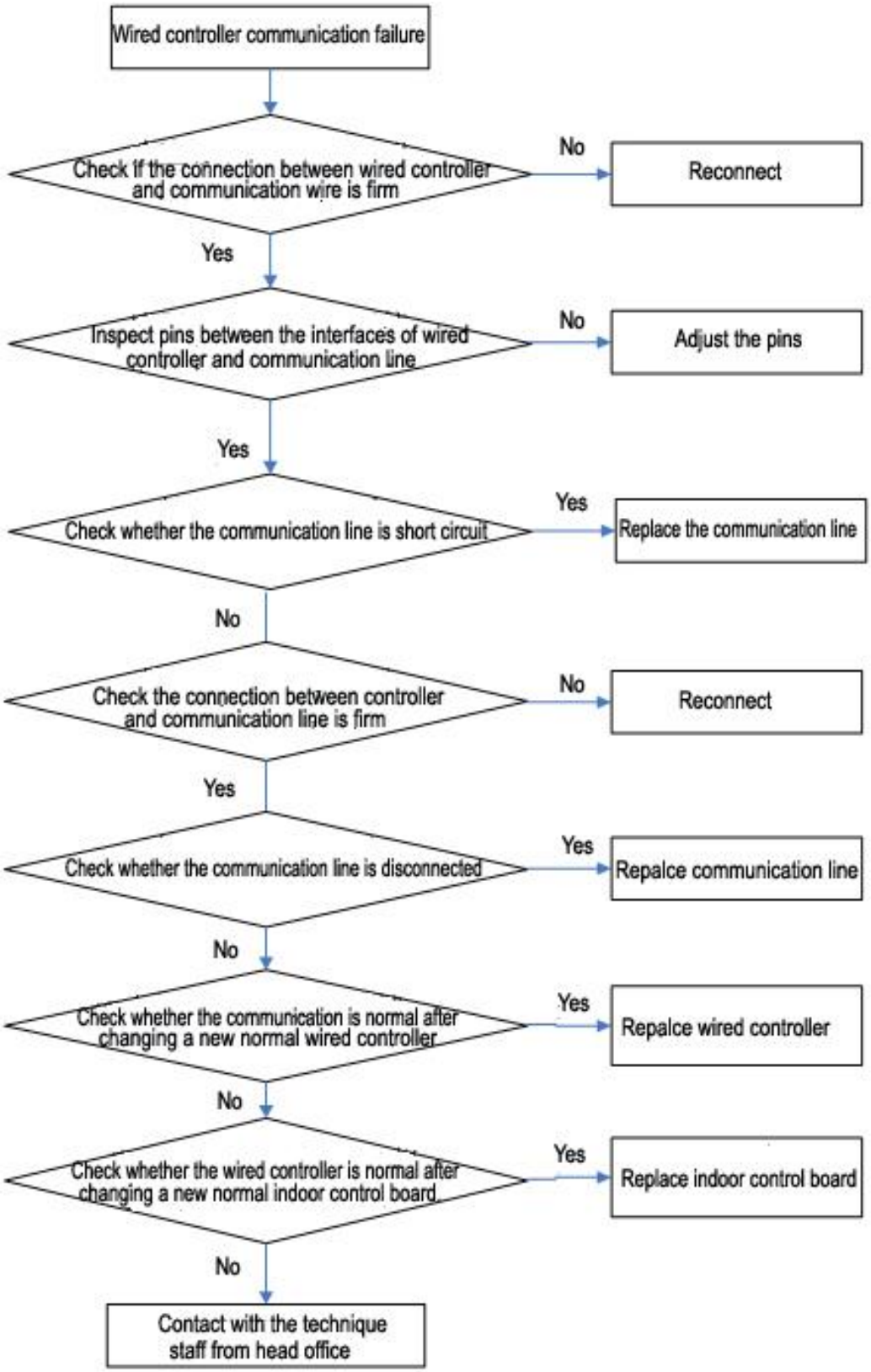

Drainage system failure

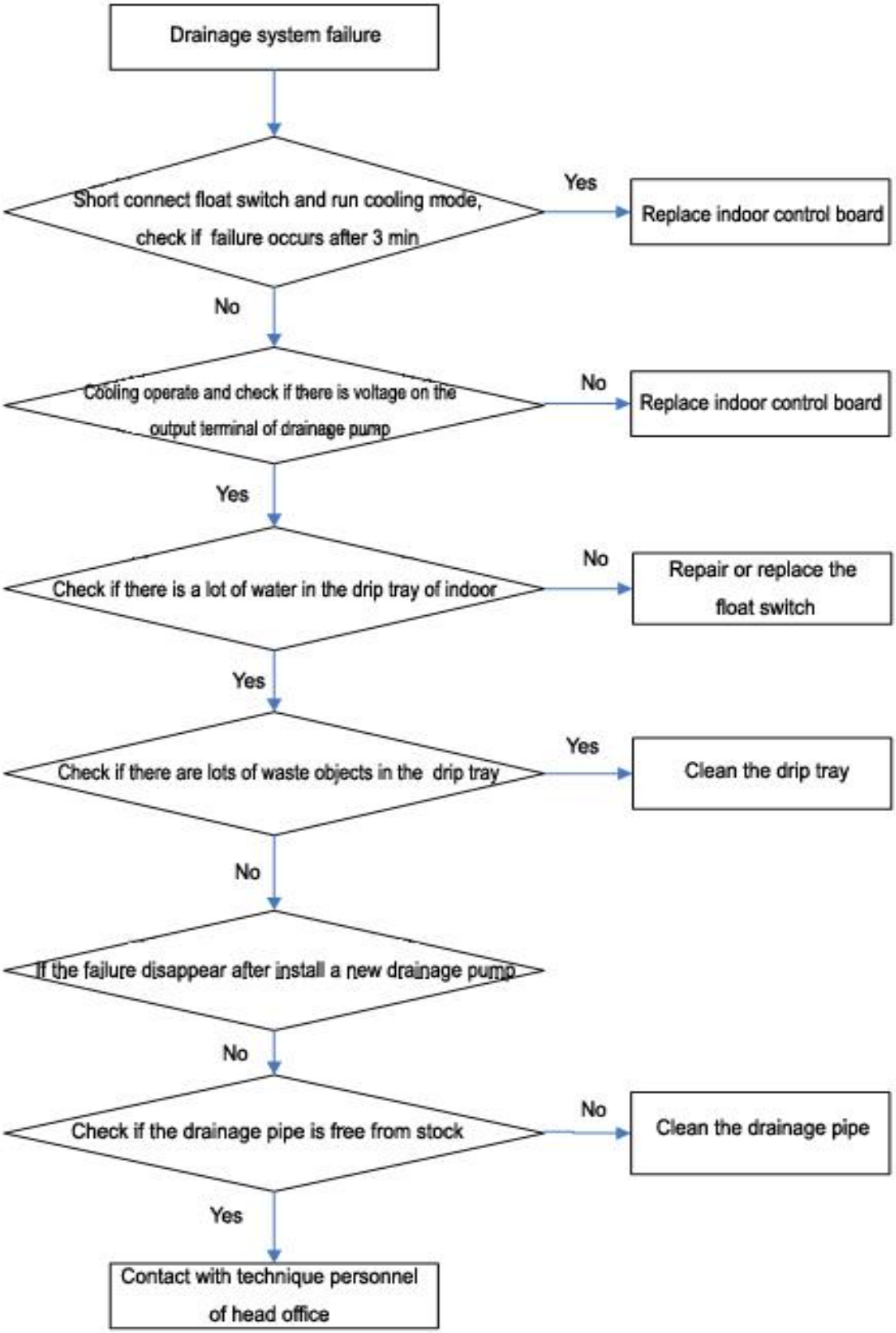

No action after power-on

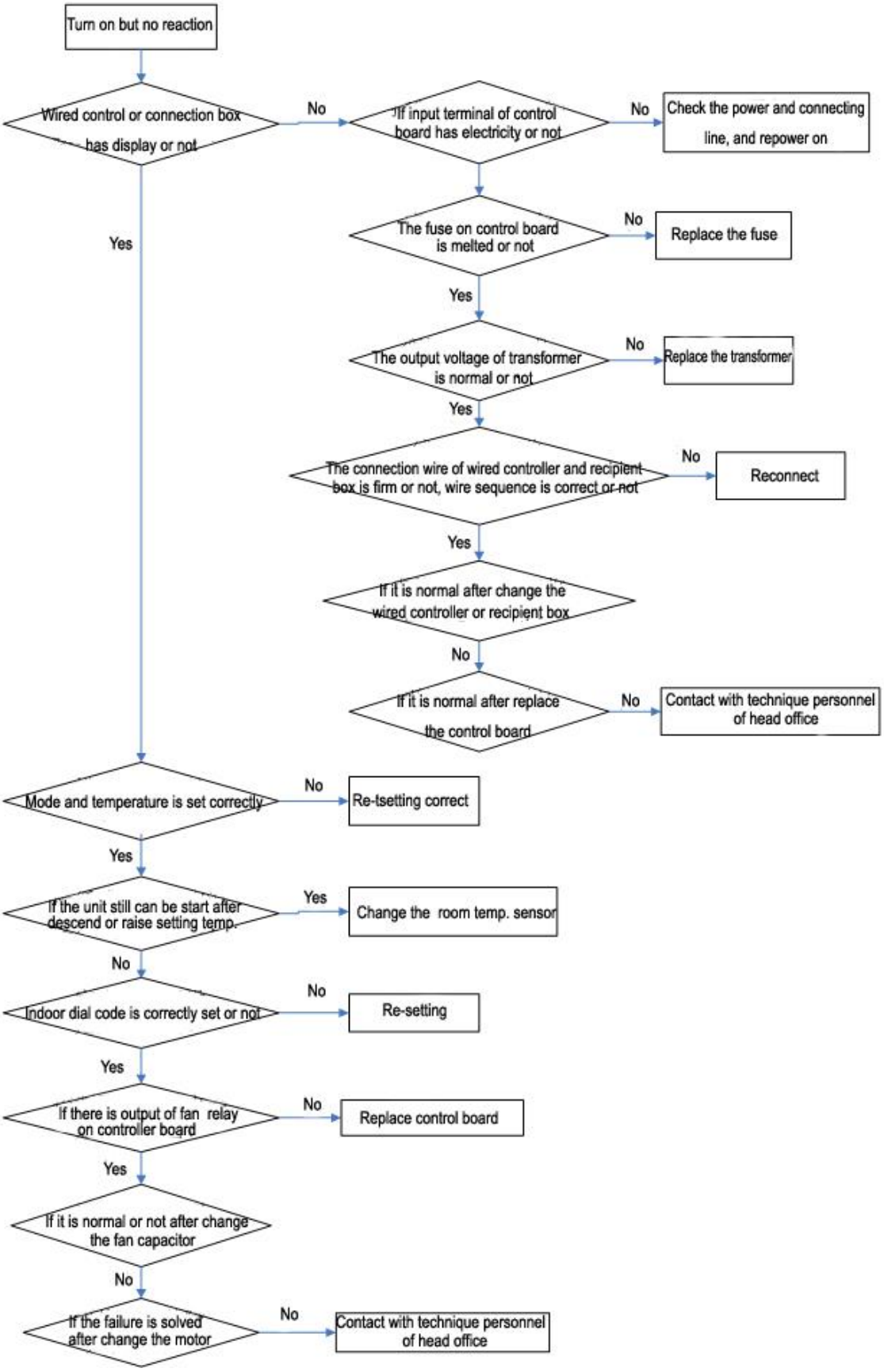

Poor Performance during Unit Operation

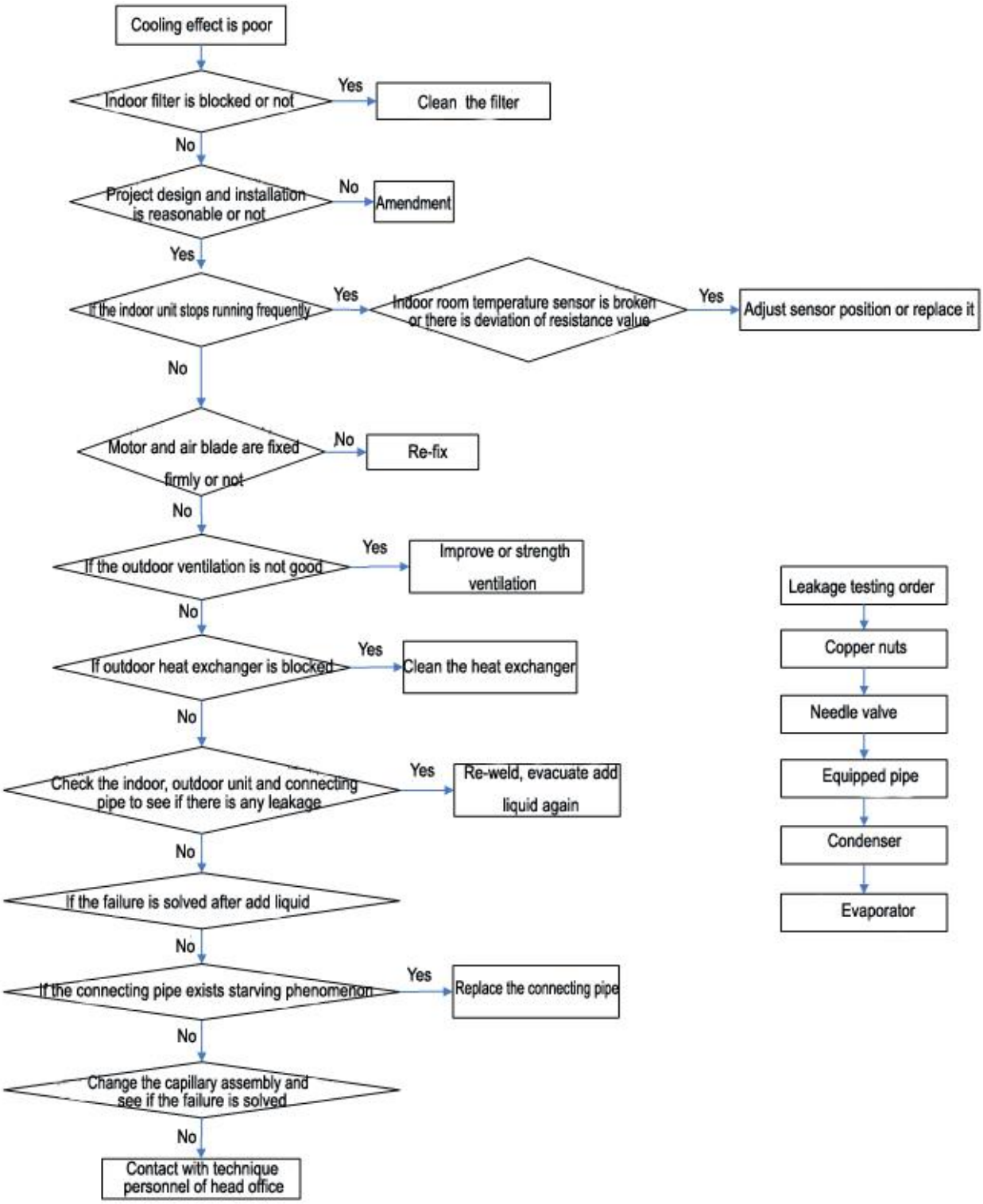

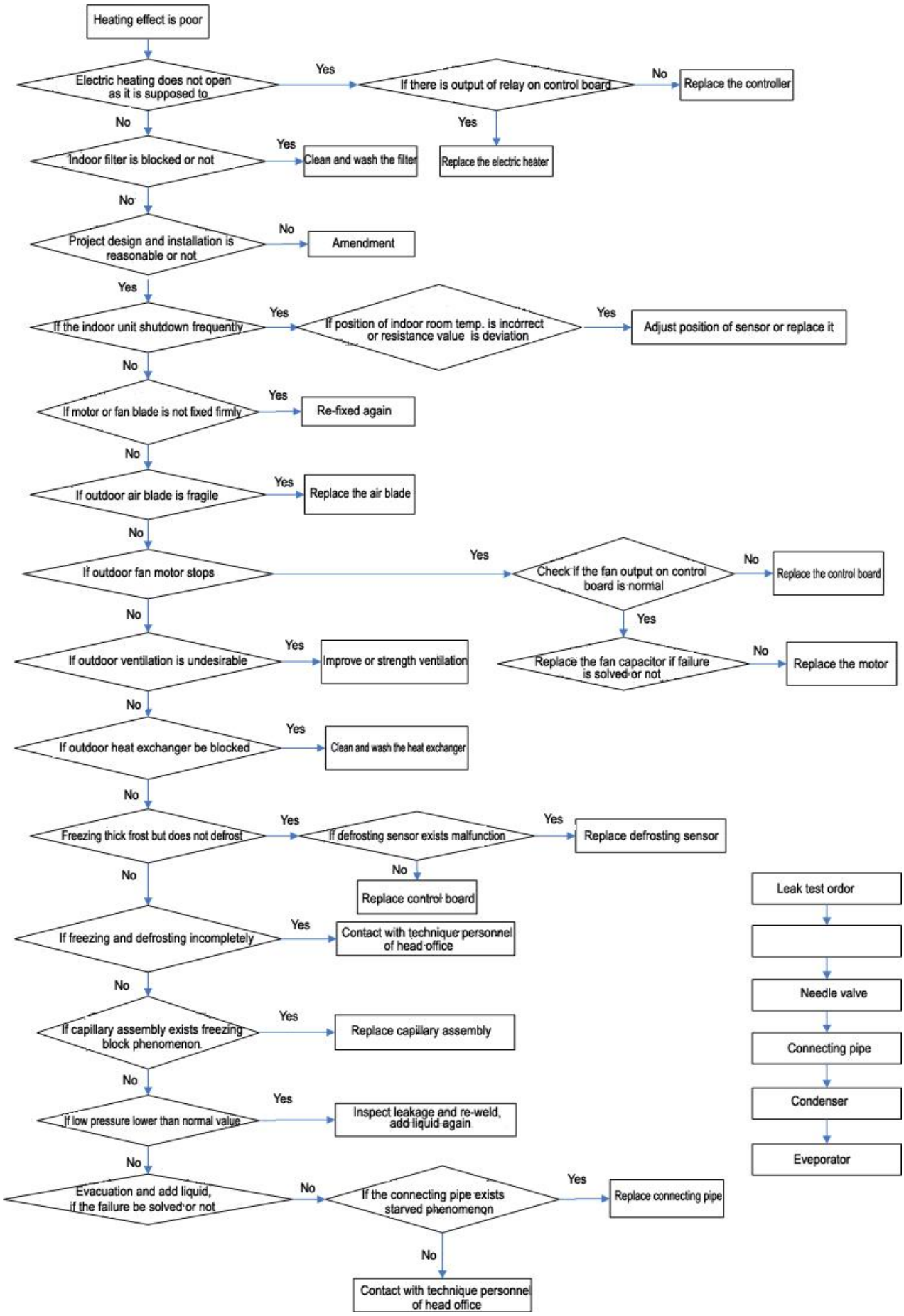
Heating effect is poor
Electric heating does not open as it is supposed to
Yes
If there is output of relay on control board
No
Replace the controller
Yes
Replace the electric heater
No
Indoor filter is blocked or not
Yes
Clean and wash the filter
No
Project design and installation is reasonable or not
No
Amendment
Yes
If the indoor unit shutdown frequently
Yes
If position of indoor room temp. is incorrect or resistance value is deviation
Yes
Adjust position of sensor or replace it
No
If motor or fan blade is not fixed firmly
Yes
Re-fixed again
No
If outdoor air blade is fragile
Yes
Replace the air blade
No
If outdoor fan motor stops
Yes
Check if the fan output on control board is normal
No
Replace the control board
Yes
Replace the fan capacitor if failure is solved or not
No
Replace the motor
No
If outdoor ventilation is undesirable
Yes
Improve or strength ventilation
No
If outdoor heat exchanger be blocked
Yes
Clean and wash the heat exchanger
No
Freezing thick frost but does not defrost
Yes
If defrosting sensor exists malfunction
Yes
Replace defrosting sensor
No
Replace control board
No
If freezing and defrosting incompletely
Yes
Contact with technique personnel of head office
No
If capillary assembly exists freezing block phenomenon
Yes
Replace capillary assembly
No
If low pressure lower than normal value
Yes
Inspect leakage and re-weld, add liquid again
No
Evacuation and add liquid, if the failure be solved or not
No
If the connecting pipe exists starved phenomenon
Yes
Replace connecting pipe
No
Contact with technique personnel of head office
Leak test ordor
Needle valve
Connecting pipe
Condenser
Eveporator

Abnormal sound or vibration

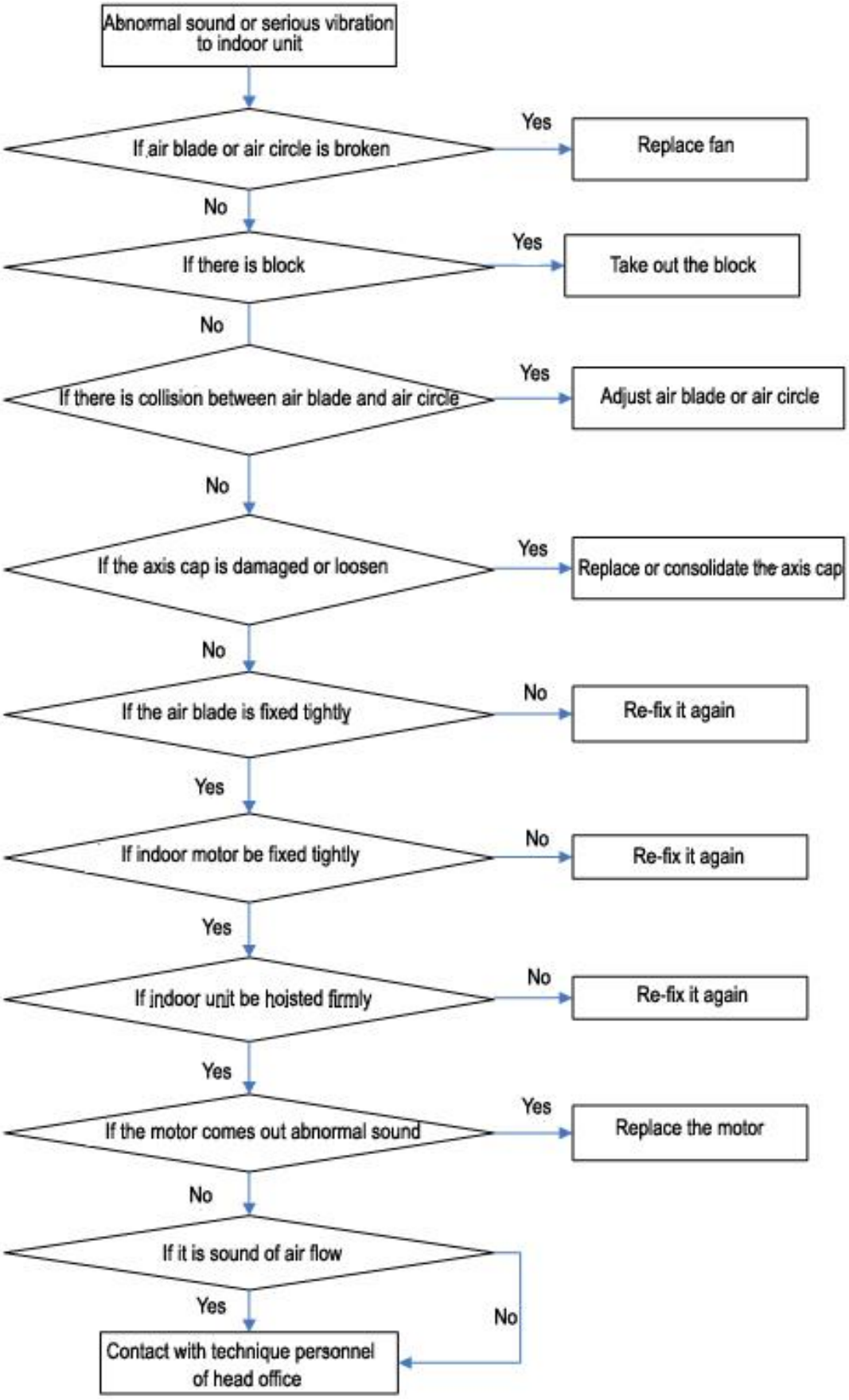

Abnormal odor

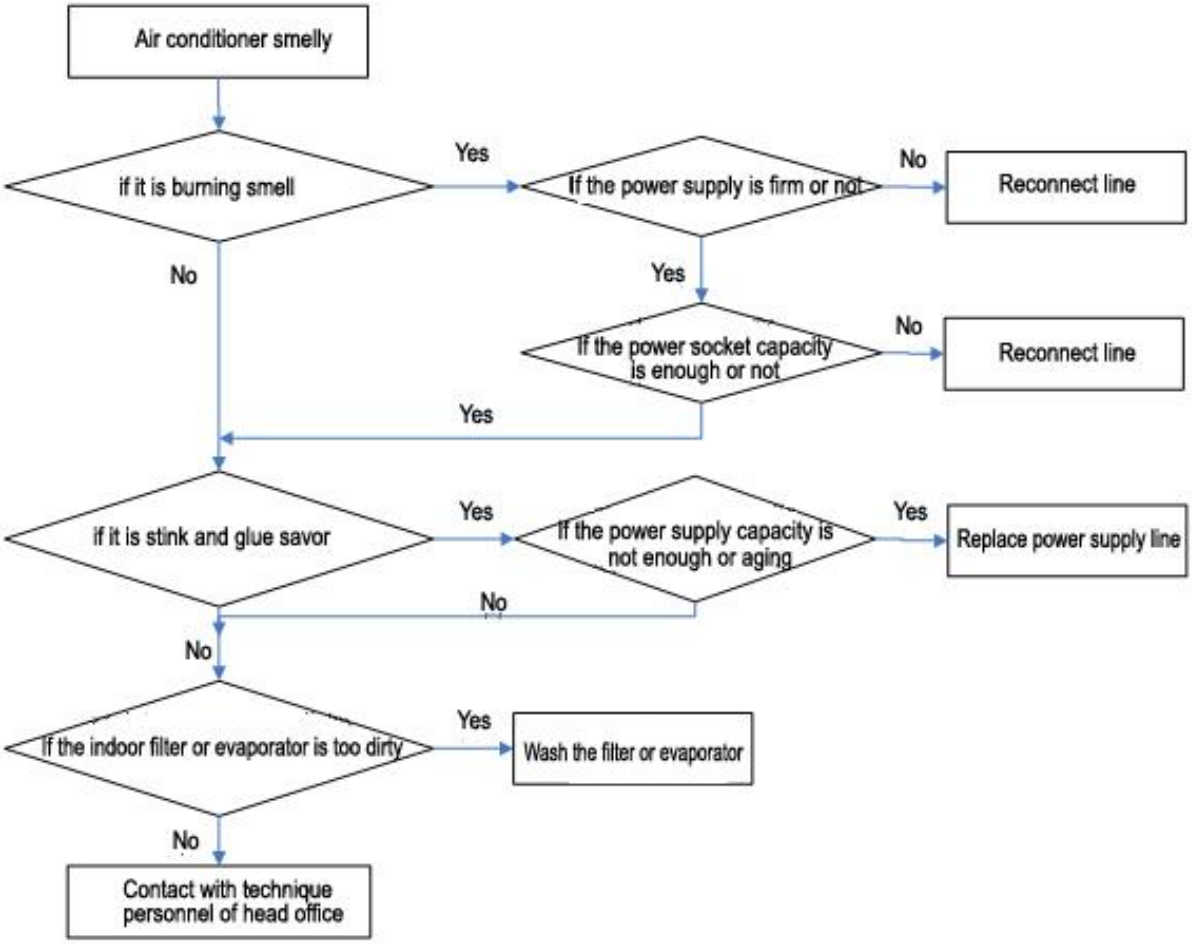
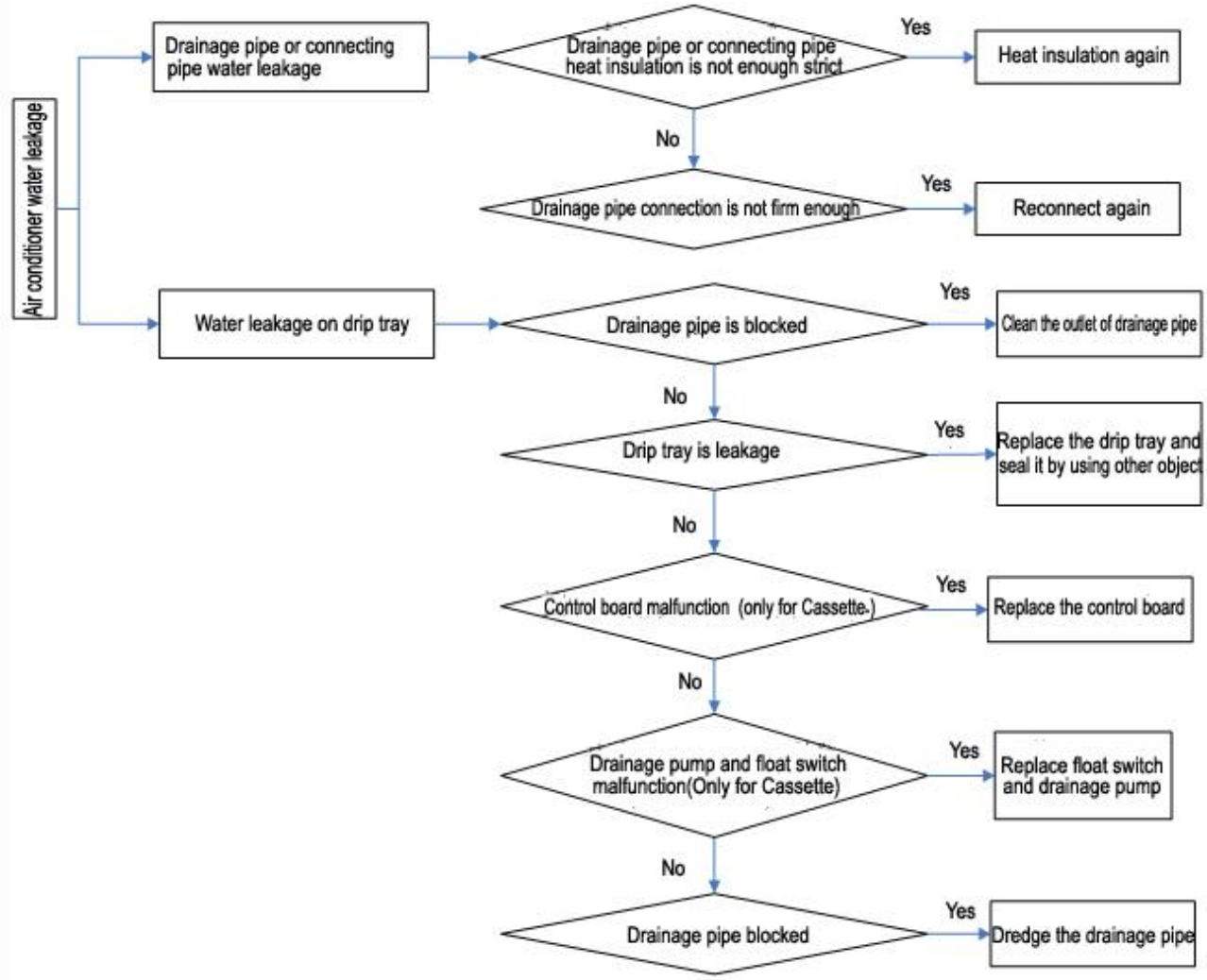
Air conditioner water leakage