AUX
Stable Solutions

Technical Manual

Horizontal concealed Fan Coil Units（M Series 6）

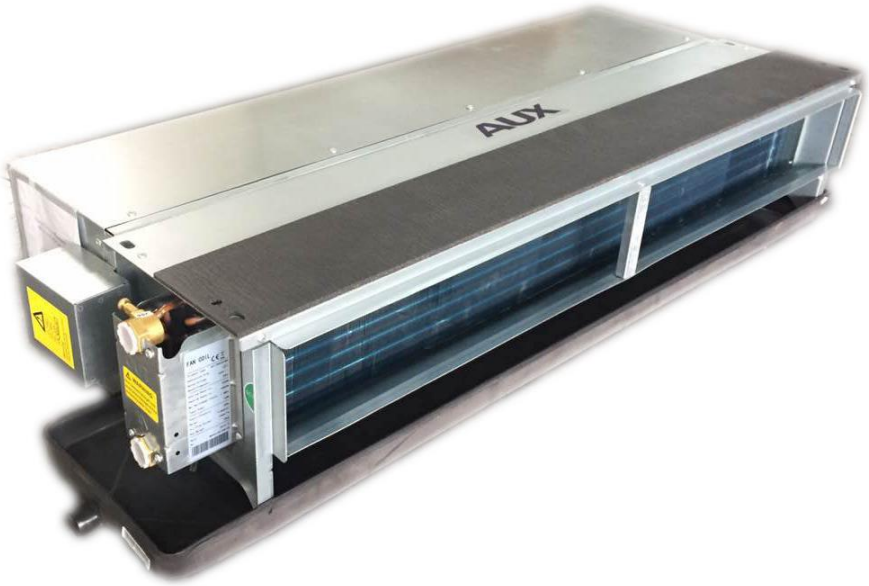

Contents

Part 1 General Information 3

Part 2 Product Parameter 6

Part 3 Installation 35

Part 4 Commissioning 43

Part 5 Trouble shooting 46

Part 1 General Information

1. Characteristics 4

2. Nomenclature 5

3. Function introduction 6

The horizontal inside mounted fan coil unit of the AFC series is designed with the characteristics of the fan coil in old type and the advanced technology of the western countries. It is well known for its smart figure, superb performance, easy installation, and diversified applications, which is proper for the central air conditioning system of the hotel, office building, and many other sites.

1. Characteristics

- **Widely application and full range**

The advanced design scheme applied to the fan coil air conditioning unit brings the unit excellent variable load characteristic and superb performance, which can be widely used for the half centralized air conditioning system, such as that in the hotel, hospital, apartment, villa, office building, and so on.

- **Excellent quality**

The superb parts are selected to ensure the excellent unit quality. The strict tests during the manufacturing and the ex-factory test for the 100% products, guarantee the trustable quality.

- **Low noise**

The combination of the permanent capacitive motor and the uniquely designed fan, as well as the dynamic balancing test for each part of the unit ensure the entire unit running quietly and efficiently.

- **High EER**

The unit is designed with optimization and the heat conduction is fostered with the motor, in order to achieve a superior ratio of the effect to the input energy.

- **Beautiful appearance , firm and durable**

The fan coil units of this series and made of superb plates. The condensate pan is shaped with the mould techniques holistically, no weld seam and weld point, and the cold insulator accorded with the fireproof regulation is wholly felted with the water pan, which keeps the unit structure symmetrical and lines simple. The buried mounted unit is suitable for the normal project and the space for the fan coil unit installation should be reserved in the project design, meanwhile, arrange the air outlet and the indoor upholster, in order to make the room layout compatible and comfortable.

- **Convenient adjustment and maintenance**

The operation for the three speed switch in button type or the external thermal control infinitely variable gear is simple to adjust the indoor air volume and the cooling capacity freely. The bearing of the motor can add the lubricating oil automatically. The motor shaft is made of the steel quenched and tempered, the surface of which is plated with the chrome or the nickel-phosphor alloy to prevent rust.

- **Flexible installation, and low cost**

The cabinet is designed smart with the overall thickness of 245mm. It is easy for the drain pipe and other tubes installation, and the left/right coupling and the return air direction can be switched freely, to adapt to the different field. The unit can be installed at any place.

- **Flexible structure and easy installation**

To meet the need of the field construction, the parts' general use is considered in the fan coil design. Change the coupling direction with the field condition. Besides, the position of the return intake can be altered freely in the field, which will save the time and labor in installation.

2. Nomenclature

A FC – 200 HC L / 4 D A

Design Series Code

Air Return Type **B: Back** **D: Down** No air return Omitted

Power Supply:
2:208-230V~,1Ph,60Hz **4:**220-240V~,1Ph,50Hz

L:Left type **R:** Right type No left or right Omitted

FCU Type:
HC: Horizontal Concealed **C1:** One-way Cassette
CA: Four-way Cassette **CF:** Ceiling & Floor
WM: Wall-mounted

Air Flow Volume (CFM)

Fan Coil Unit

AUX

Note: Face to the air outlet of the unit, and if the coupling is at your left hand, the unit is left type; or else, it is the right type.

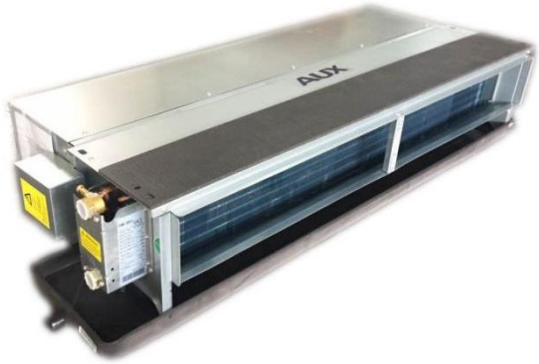

(On the reference direction that facing to the air outlet of the unit)

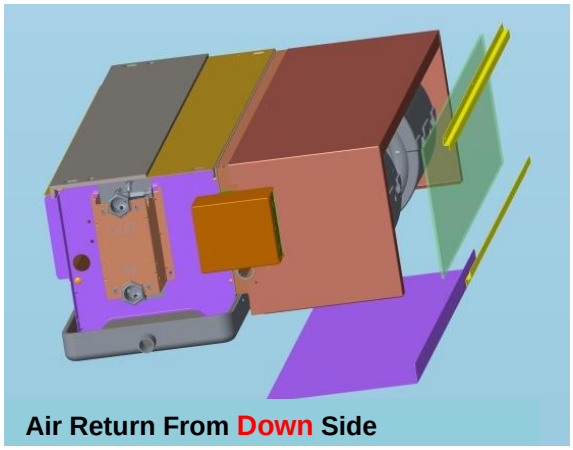

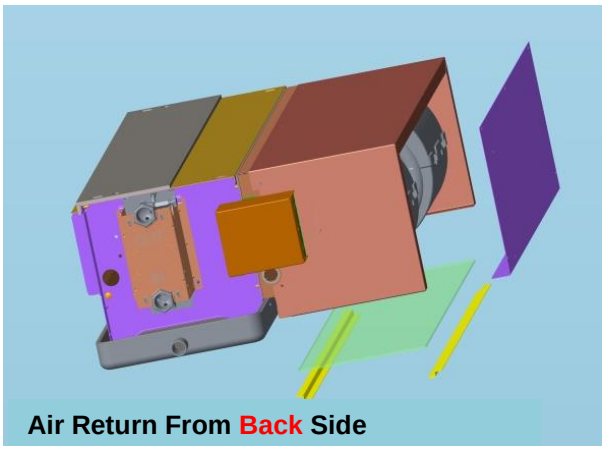

3 Function introduction

Category	No.	Function name
Control Function	1	Thermostat
Comfort Function	1	Rapid cooling
	2	Three fan speed
	3	Rapid heating
	4	Humidification（Reserved）
Health	1	With detachable air filter
	2	Reserve fresh air intake function
Installation	1	Left and right drain pipe can be selected
	2	Back air return and down air return can be selected.
	3	Static pressure can be adjusted
	4	Left and right connecting pipe can be selected

Part 2 Product Parameter

1.Unit Performance 8

2. Unit Dimension..... 20

3. Optional components 20

4. Working principles of the system..... 20

5. Product selection..... 21

6.Unit explosion figure and spare part list 23

1. Unit Performance

1.1 Outline Drawing

HC series	Air Volume(CFM))								
	200	300	400	500	600	800	1000	1200	1400
HC									

1.2 Unit Performance Parameter Table

1.2.1 Horizontal Concealed Fan Coil Parameter Table

Model			AFC-200HC L(R)/4BA6M	AFC-300HC L(R)/4BA6M	AFC-400HC L(R)/4BA6M	AFC-500HC L(R)/4BA6M	AFC-600HC L(R)/4BA6M	AFC-800HC L(R)/4BA6M	AFC-1000HC L(R)/4BA6M	AFD-1200HC L(R)/4BA6M	AFC-1400HC L(R)/4BA6M
Air Volume	Hi Speed	CFM	200	300	400	500	600	800	1000	1200	1400
		m^3/h	340	510	680	850	1020	1360	1700	2040	2380
	Medium Speed	CFM	150	225	300	375	450	600	750	900	1050
		m^3/h	255	382	510	638	765	1020	1275	1530	1785
	Low Speed	CFM	100	150	200	250	300	400	500	600	700
		m^3/h	170	255	340	425	510	680	850	1020	1190
Cooling Capacity	Hi Speed	W	2250	3200	4250	5030	6200	8120	9800	11250	13200
	Medium Speed	W	1921	2732	3630	4289	5276	6912	8346	9572	11229
	Low Speed	W	1469	2089	2777	3280	4035	5286	6383	7320	8587

Heating Capacity	Hi Speed	W	3900	5222	6728	7903	10200	13570	16025	19800	22100
	Medium Speed	W	3327	4461	5737	6735	8686	11542	13633	16835	18786
	Low Speed	W	2544	3412	4388	5150	6643	8827	10426	12874	14366
ESP		Pa	Standard (30Pa) / Optional (12Pa)								
Rows Of Coil			3	3	3	3	3	3	3	3	3
Noise Level	Low ESP	dB (A)	≤40	≤42	≤44	≤46	≤47	≤48	≤50	≤52	≤54
Fan Motor	Fan Quantity		1	2	2	2	2	3	4	4	4
	Motor Quantity		1	1	1	1	1	2	2	2	2
	Power Input	W	44	57	71	87	107	156	174	212	253
Water Flow Volume		m^3/h	0.4	0.55	0.75	0.85	1.08	1.4	1.7	2.0	2.3
Hydraulic Resistance		K Pa	30	30	30	30	40	40	40	40	50
Max. Working pressure		M Pa	1.6	1.6	1.6	1.6	1.6	1.6	1.6	1.6	1.6
Dimension （W x D x H）	Net	mm	694×518×240	894×518×240	894×518×240	1039×518×240	1129×518×240	1319×518×240	1719×518×240	1719×518×240	1909×518×240
	Packing	mm	715×260×545	915×260×545	915×260×545	1060×260×545	1150×260×545	1340×260×545	1740×260×545	1740×260×545	1930×260×545
Net/Gross Weight		kg	14.1/16.1	18.3/20.8	18.6/21.2	20.8/23.8	22.2/25.7	28.9/32.9	36.2/40.7	36.9/41.5	40.8/46.3
Inlet/Outlet Water Pipe			Rc3/4″(DN20)								
Drain Pipe			R3/4″(DN20)								

Note:

1. Cooling capacity test conditions: Air inlet Temp. : 27 ℃ DB/19.5 ℃WB, Water inlet/outlet Temp. : 7 ℃/12 ℃;
2. Heating capacity test conditions: Air inlet Temp. : 21 ℃DB, Water inlet Temp. : 60 ℃;
3 .Noise level is tested in full-anechoic room.

1.2.2. Parameter tables in different working condition

Parameter tables in different cooling condition (3 Rows of Coil)

Air inlet temperature℃			26℃ DB/18.7℃ WB						27℃ DB/19℃ WB					
Water inlet temperature℃			5		7		9		5		7		9	
Model	Water flow (kg/h)	Water resistance (k Pa)	Full heat	Sensible heat	Full heat	Sensible heat	Full heat	Sensible heat	Full heat	Sensible heat	Full heat	Sensible heat	Full heat	Sensible heat
200	200	6.5	1224	928	1083	870	928	760	1250	979	1141	921	960	805
	300	12.8	1821	1359	1603	1259	1376	1099	1871	1435	1653	1326	1426	1166
	400	25	2426	1649	2141	1516	1848	1317	2483	1724	2198	1592	1905	1412
	500	37.7	3017	1915	2685	1754	2311	1519	3092	2011	2717	1851	2386	1615
300	350	14.6	2142	1624	1894	1522	1624	1330	2187	1714	1996	1612	1680	1409
	450	18.8	2731	2039	2404	1888	2064	1649	2807	2152	2479	1988	2140	1749
	550	34.2	3335	2267	2945	2085	2541	1811	3414	2371	3023	2189	2619	1941
	650	43.5	3922	2489	3491	2281	3004	1975	4019	2614	3532	2406	3101	2100
400	550	16.6	3366	2551	2976	2391	2551	2090	3436	2692	3135	2533	2639	2214
	650	20.1	3945	2945	3472	2727	2982	2382	4054	3109	3582	2873	3091	2527
	750	38.2	4549	3092	4016	2843	3465	2470	4655	3234	4122	2985	3571	2648
	850	64.3	5128	3255	4564	2982	3927	2582	5255	3418	4618	3146	4055	2746
500	650	18.9	3978	3015	3518	2827	3015	2471	4062	3183	3706	2994	3120	2617
	750	26.4	4552	3398	4006	3146	3440	2748	4678	3587	4132	3314	3566	2916
	850	36	5155	3504	4551	3222	3927	2799	5276	3665	4672	3383	4047	3000
	950	50	5732	3638	5101	3333	4390	2886	5874	3821	5162	3516	4532	3069
600	880	22.6	5385	4081	4762	3826	4081	3344	5498	4308	5017	4053	4223	3543
	980	29.5	5948	4440	5235	4111	4495	3591	6112	4687	5400	4331	4660	3810
	1080	39.2	6550	4452	5783	4094	4989	3557	6704	4657	5936	4299	5143	3812
	1180	52.7	7118	4518	6336	4140	5452	3584	7295	4746	6412	4367	5629	3812
800	1000	15.5	6119	4638	5411	4348	4638	3801	6248	4896	5701	4606	4799	4026
	1200	23.1	7283	5437	6410	5034	5504	4396	7484	5739	6612	5303	5705	4665
	1400	33.6	8491	5771	7496	5307	6468	4611	8690	6037	7695	5572	6667	4942
	1600	48.6	9652	6127	8591	5613	7393	4860	9892	6435	8694	5921	7633	5168
1000	1300	22.9	7955	6029	7034	5653	6029	4941	8123	6364	7411	5988	6239	5234
	1500	28.8	9103	6796	8013	6293	6880	5496	9355	7174	8264	6628	7132	5831
	1700	37.4	10311	7008	9103	6444	7854	5598	10553	7330	9344	6767	8096	6001
	1900	49.1	11462	7276	10202	6666	8779	5772	11747	7641	10324	7032	9064	6137
1200	1600	30.5	9791	7421	8658	6957	7421	6081	9998	7833	9121	7369	7679	6442

	1800	39.6	10924	8155	9615	7551	8256	6595	11226	8608	9917	7954	8558	6997
	2000	50.4	12130	8245	10709	7581	9240	6586	12415	8624	10993	7961	9524	7060
	2200	64.8	13272	8424	11813	7718	10166	6683	13601	8848	11954	8142	10495	7107
1400	1900	31.5	11627	8812	10281	8262	8812	7221	11872	9302	10832	8751	9118	7650
	2100	40.7	12745	9515	11218	8810	9632	7694	13097	10043	11570	9280	9984	8164
	2300	51.6	13950	9482	12315	8719	10626	7574	14277	9917	12642	9155	10953	8119
	2500	67.5	15082	9573	13424	8771	11552	7594	15456	10054	13584	9252	11926	8076

Air inlet temperature℃			27℃ DB/19.5℃ WB						28℃ DB/22℃ WB					
Water inlet temperature℃			5		7		9		5		7		9	
Model	Water flow (kg/h)	Water resistance (kPa)	Full heat	Sensible heat	Full heat	Sensible heat	Full heat	Sensible heat	Full heat	Sensible heat	Full heat	Sensible heat	Full heat	Sensible heat
200	200	6.5	1295	960	1147	889	1056	886	1624	1204	1469	1139	1327	984
	300	12.8	1938	1401	1720	1292	1498	1225	2425	1753	2207	1658	1988	1438
	400	25	2596	1706	2293	1563	2000	1482	3212	2110	2947	2009	2653	1743
	500	37.7	3199	1990	2867	1808	2505	1696	4012	2496	3659	2307	3274	2036
300	350	14.6	2266	1680	2007	1556	1848	1550	2841	2106	2571	1993	2323	1722
	450	18.8	2907	2102	2580	1938	2246	1837	3637	2629	3310	2486	2983	2156
	550	34.2	3570	2345	3153	2150	2750	2038	4417	2902	4052	2763	3648	2397
	650	43.5	4158	2587	3727	2350	3256	2205	5215	3244	4756	2999	4255	2647
400	550	16.6	3560	2639	3153	2444	2903	2436	4464	3309	4039	3131	3649	2705
	650	20.1	4200	3036	3727	2800	3245	2653	5254	3798	4781	3592	4309	3115
	750	38.2	4869	3198	4300	2932	3750	2780	6024	3957	5526	3768	4975	3268
	850	64.3	5437	3382	4873	3073	4258	2883	6819	4242	6219	3921	5564	3461
500	650	18.9	4209	3120	3727	2889	3432	2879	5276	3911	4774	3701	4313	3197
	750	26.4	4845	3503	4300	3230	3744	3061	6062	4382	5517	4144	4971	3594
	850	36	5517	3625	4873	3323	4250	3150	6826	4484	6262	4270	5638	3704
	950	50	6077	3780	5447	3435	4759	3222	7622	4741	6951	4383	6219	3869

600	880	22.6	5697	4223	5045	3911	4645	3897	7142	5295	6462	5010	5839	4328
	980	29.5	6332	4577	5619	4221	4893	4000	7921	5727	7209	5415	6496	4696
	1080	39.2	7011	4606	6192	4222	5400	4003	8674	5698	7957	5426	7164	4706
	1180	52.7	7548	4695	6765	4266	5911	4002	9466	5889	8633	5444	7724	4805
800	1000	15.5	6474	4799	5733	4445	5279	4429	8116	6017	7343	5693	6635	4918
	1200	23.1	7753	5605	6880	5168	5991	4898	9699	7012	8827	6631	7954	5750
	1400	33.6	9088	5970	8027	5473	7000	5189	11244	7387	10316	7033	9287	6101
	1600	48.6	10234	6366	9173	5784	8014	5427	12835	7985	11706	7382	10474	6515
1000	1300	22.9	8416	6239	7453	5778	6863	5757	10551	7822	9547	7401	8625	6394
	1500	28.8	9691	7006	8600	6460	7488	6123	12124	8765	11033	8288	9942	7188
	1700	37.4	11036	7250	9747	6646	8500	6301	13654	8970	12526	8541	11278	7409
	1900	49.1	12153	7560	10893	6869	9517	6444	15242	9482	13901	8766	12438	7737
1200	1600	30.5	10358	7679	9173	7112	8446	7086	12986	9627	11750	9109	10616	7870
	1800	39.6	11629	8407	10320	7753	8986	7347	14549	10518	13240	9946	11931	8625
	2000	50.4	12983	8529	11467	7818	10000	7413	16063	10553	14737	10048	13268	8716
	2200	64.8	14072	8754	12613	7954	11020	7462	17649	10979	16096	10150	14401	8959
1400	1900	31.5	12301	9118	10893	8445	10030	8415	15422	11432	13953	10817	12607	9345
	2100	40.7	13567	9808	12040	9045	10484	8572	16973	12271	15446	11604	13919	10063
	2300	51.6	14931	9809	13187	8991	11500	8525	18473	12135	16947	11555	15258	10023
	2500	67.5	15991	9948	14333	9038	12523	8479	20056	12476	18291	11534	16365	10180

1.2.3. Parameter tables in different heating condition

Air inlet temperature℃			18℃ DB						20℃ DB					
Water inlet temperature℃														
Model	Water flow (kg/h)	Water resistance (kPa)	40	45	50	60	70	80	40	45	50	60	70	80
200	200	6.5	1151	1411	1677	2197	2717	3244	1047	1313	1567	2093	2620	3140
	300	12.8	1721	2111	2509	3288	4077	4856	1567	1957	2346	3134	3914	4702
	400	25	2305	2834	3351	4397	5454	6488	2103	2620	3149	4206	5240	6297
	500	37.7	2880	3549	4192	5491	6804	8117	2625	3268	3938	5237	6550	7862
300	350	14.6	2014	2469	2935	3845	4755	5677	1832	2298	2742	3663	4584	5495
	450	18.8	2581	3165	3763	4932	6114	7282	2350	2935	3519	4701	5869	7051
	550	34.2	3170	3897	4608	6046	7499	8922	2892	3603	4330	5783	7206	8659
	650	43.5	3743	4614	5449	7138	8844	10550	3412	4248	5118	6807	8513	10219
400	550	16.6	3164	3879	4612	6042	7472	8920	2878	3611	4308	5756	7204	8634
	650	20.1	3729	4572	5436	7124	8831	10519	3395	4239	5083	6790	8478	10185
	750	38.2	4323	5314	6283	8244	10226	12166	3943	4913	5904	7886	9826	11808
	850	64.3	4895	6034	7127	9335	11567	13798	4463	5556	6694	8903	11134	13365
500	650	18.9	3739	4584	5450	7140	8830	10541	3401	4267	5091	6802	8513	10203
	750	26.4	4303	5276	6273	8220	10190	12138	3918	4891	5865	7835	9783	11753
	850	36	4899	6022	7122	9344	11591	13789	4469	5568	6691	8938	11137	13383
	950	50	5471	6743	7965	10433	12927	15420	4987	6209	7481	9949	12443	14937
600	880	22.6	5063	6207	7379	9667	11956	14272	4605	5778	6893	9210	11527	13815
	980	29.5	5622	6894	8196	10741	13315	15860	5119	6391	7663	10238	12782	15357
	1080	39.2	6225	7652	9048	11872	14726	17520	5678	7075	8502	11356	14149	17004
	1180	52.7	6795	8376	9893	12959	16056	19153	6195	7712	9292	12358	15455	18553
800	1000	15.5	5753	7053	8385	10985	13585	16218	5233	6565	7833	10465	13098	15698
	1200	23.1	6884	8442	10036	13152	16304	19420	6268	7826	9384	12536	15652	18804
	1400	33.6	8068	9918	11729	15389	19089	22710	7360	9170	11020	14720	18341	22041
	1600	48.6	9215	11357	13415	17572	21772	25972	8400	10457	12600	16758	20958	25158
1000	1300	22.9	7479	9169	10901	14281	17661	21084	6803	8535	10183	13605	17027	20408
	1500	28.8	8605	10553	12545	16440	20380	24275	7835	9783	11730	15670	19565	23505
	1700	37.4	9798	12044	14242	18687	23180	27577	8937	11136	13382	17875	22272	26764
	1900	49.1	10942	13486	15929	20866	25853	30841	9975	12418	14962	19899	24886	29874
1200	1600	30.5	9205	11285	13417	17577	21737	25950	8373	10505	12533	16745	20957	25118
	1800	39.6	10326	12663	15055	19729	24457	29131	9402	11739	14076	18805	23479	28207
	2000	50.4	11527	14170	16756	21985	27271	32444	10515	13101	15744	21030	26203	31488
	2200	64.8	12670	15616	18445	24161	29936	35711	11550	14379	17325	23041	28816	34591
1400	1900	31.5	10930	13400	15932	20872	25812	30814	9942	12474	14882	19884	24886	29826
	2100	40.7	12047	14773	17563	23016	28532	33985	10969	13696	16422	21938	27391	32907
	2300	51.6	13256	16295	19269	25283	31361	37309	12092	15066	18105	24183	30132	36210
	2500	67.5	14397	17745	20959	27455	34017	40580	13125	16339	19687	26183	32745	39307

Air inlet temperature℃			21℃ DB						22℃ DB					
Water inlet temperature℃														
Model	Water flow (kg/h)	Water resistance (k Pa)	40	45	50	60	70	80	40	45	50	60	70	80
200	200	6.5	1001	1255	1515	2041	2568	3081	943	1196	1463	1989	2509	3029
	300	12.8	1486	1884	2274	3062	3841	4629	1404	1803	2192	2971	3760	4539
	400	25	1990	2519	3036	4082	5139	6174	1889	2406	2935	3981	5027	6084
	500	37.7	2505	3148	3804	5103	6416	7728	2357	3014	3656	4969	6282	7608
300	350	14.6	1752	2196	2651	3572	4493	5392	1649	2093	2560	3481	4391	5301
	450	18.8	2228	2826	3410	4592	5760	6942	2106	2704	3288	4456	5638	6806
	550	34.2	2737	3464	4175	5613	7067	8489	2598	3309	4036	5474	6912	8365
	650	43.5	3256	4091	4944	6633	8339	10045	3064	3917	4753	6459	8165	9889
400	550	16.6	2753	3450	4165	5613	7061	8473	2592	3289	4022	5470	6900	8330
	650	20.1	3218	4082	4926	6633	8321	10028	3042	3905	4749	6437	8144	9832
	750	38.2	3732	4723	5693	7654	9636	11576	3542	4512	5503	7464	9425	11407
	850	64.3	4258	5351	6466	8675	10906	13138	4007	5123	6216	8447	10679	12933
500	650	18.9	3253	4077	4922	6633	8344	10013	3063	3887	4753	6464	8154	9844
	750	26.4	3714	4710	5684	7654	9601	11572	3510	4506	5480	7428	9398	11345
	850	36	4230	5353	6452	8675	10921	13120	4015	5114	6237	8460	10682	12929
	950	50	4758	5980	7227	9695	12189	14682	4479	5725	6947	9441	11934	14453
600	880	22.6	4405	5520	6664	8981	11298	13557	4147	5263	6435	8752	11040	13328
	980	29.5	4853	6154	7427	10001	12546	15120	4586	5888	7160	9705	12279	14824
	1080	39.2	5374	6801	8198	11022	13876	16670	5101	6498	7925	10749	13573	16427
	1180	52.7	5910	7427	8976	12042	15139	18237	5563	7111	8629	11726	14823	17952
800	1000	15.5	5005	6273	7573	10205	12838	15405	4713	5980	7313	9945	12545	15145
	1200	23.1	5942	7536	9094	12246	15362	18514	5616	7210	8768	11884	15036	18152
	1400	33.6	6966	8816	10627	14287	17987	21608	6612	8423	10272	13933	17593	21293
	1600	48.6	8014	10072	12172	16329	20529	24729	7543	9643	11700	15900	20101	24343
1000	1300	22.9	6507	8155	9845	13267	16689	20027	6126	7774	9507	12929	16309	19689
	1500	28.8	7428	9420	11368	15308	19203	23143	7020	9013	10960	14855	18795	22690
	1700	37.4	8459	10706	12904	17349	21842	26239	8029	10228	12474	16919	21364	25856
	1900	49.1	9517	11960	14453	19390	24377	29365	8957	11451	13894	18881	23869	28907
1200	1600	30.5	8008	10037	12117	16329	20541	24650	7540	9569	11701	15913	20073	24233
	1800	39.6	8913	11305	13642	18370	23044	27772	8424	10815	13152	17827	22555	27229
	2000	50.4	9952	12595	15182	20411	25696	30870	9446	12033	14676	19905	25134	30420
	2200	64.8	11020	13848	16736	22452	28227	34002	10372	13259	16088	21863	27638	33472
1400	1900	31.5	9510	11918	14388	19390	24392	29270	8954	11362	13894	18896	23836	28776
	2100	40.7	10398	13188	15915	21431	26884	32400	9828	12618	15344	20797	26313	31766
	2300	51.6	11445	14484	17459	23472	29550	35499	10863	13837	16877	22890	28904	34982
	2500	67.5	12522	15736	19018	25513	32075	38638	11786	15067	18281	24843	31406	38035

1.2.4.Wind pressure curve

Model		Standard	Static pressure value(Pa)														
		Air flow	0	5	10	15	20	25	30	35	40	45	50	55	60	65	70
200	High	340	473	445	435	415	391	367	340	323	309.4	289	255	238	210.8	187	153
	Med	340	354	334	326	311	293	275	255	242	232	216.75	191	178.5	158.1	140.25	114
	Low	340	236	223	218	207	196	184	170	161.5	154.7	144.5	127.5	119	105.4	93.5	76.5
300	High	510	709	668	653	622	587	551	510	484.5	464.1	433.5	382.5	357	316.2	280.5	229.5
	Med	510	532	501	490	467	440	413	382.5	363	348	325	286	267	237	210	172
	Low	510	354	334	326	311	293	275	255	242	232	216	191	178.5	158.1	140	114
400	High	680	945	891	870	830	782	734	680	646	618.8	578	510	476	421.6	374	306
	Med	680	709	668	653	622	587	551	510	484.5	464.1	433.5	382.5	357	316.2	280.5	229.5
	Low	680	473	445	435	415	391	367	340	323	309.4	289	255	238	210.8	187	153
500	High	850	1063	1003	969	935	918	876	850	816	773.5	756.5	722.5	671.5	629	578	527
	Med	850	797	752	727	701	689	657	637.5	612	580	567	541	503	471	433.5	395
	Low	850	531	502	485	468	459	438	425	408	386	378	361	335.75	314.5	289	263.5
600	High	851	1275	1204	1163	1122	1102	1051	1020	979.2	928.2	907.8	867	805.8	754.8	693.6	632.4
	Med	851	956	903	872	842	826	788	765	734.4	696	680	650	604	566.1	520.2	474.3
	Low	851	638	602	581	561	551	525	510	489.6	464.1	453.9	433.5	402.9	377.4	346.8	316.2
800	High	852	1700	1605	1550	1496	1469	1401	1360	1305.6	1237.6	1210.4	1156	1074.4	1006.4	924.8	843.2
	Med	852	1275	1204	1163	1122	1102	1051	1020	979.2	928.2	907.8	867	805.8	754.8	693.6	632.4
	Low	852	850	802	775	748	734	700	680	652.8	618.8	605.2	578	537.2	503.2	462.4	421.6
1000	High	853	2125	2006	1938	1870	1836	1751	1700	1632	1547	1513	1445	1343	1258	1156	1054
	Med	853	1594	1505	1454	1403	1377	1313	1275	1224	1160	1134	1083	1007	943.5	867	790.5
	Low	853	1063	1003	969	935	918	876	850	816	773.5	756.5	722.5	671.5	629	578	527
1200	High	2040	2387	2305	2244	2203	2162	2101	2040	1958.4	1897.2	1815.6	1734	1652.4	1591.2	1509.6	1428
	Med	2040	1790	1729	1683	1652	1622	1576	1530	1468.8	1422.9	1361.7	1300.5	1239.3	1193.4	1132.2	1071
	Low	2040	1193	1153	1122	1102	1081	1051	1020	979.2	948.6	907.8	867	826.2	795.6	754.8	714

Horizontal concealed FCU 50Hz

1400	High	2380	2785	2689	2618	2570	2523	2451	2380	2284.8	2213.4	2118.2	2023	1927.8	1856.4	1761.2	1666
	Med	2380	2088	2017	1964	1928	1892	1839	1785	1713.6	1660	1588	1517	1445	1392.3	1320.9	1249.5
	Low	2380	1392	1345	1309	1285	1261	1226	1190	1142.4	1106.7	1059.1	1011.5	963.9	928.2	880.6	833

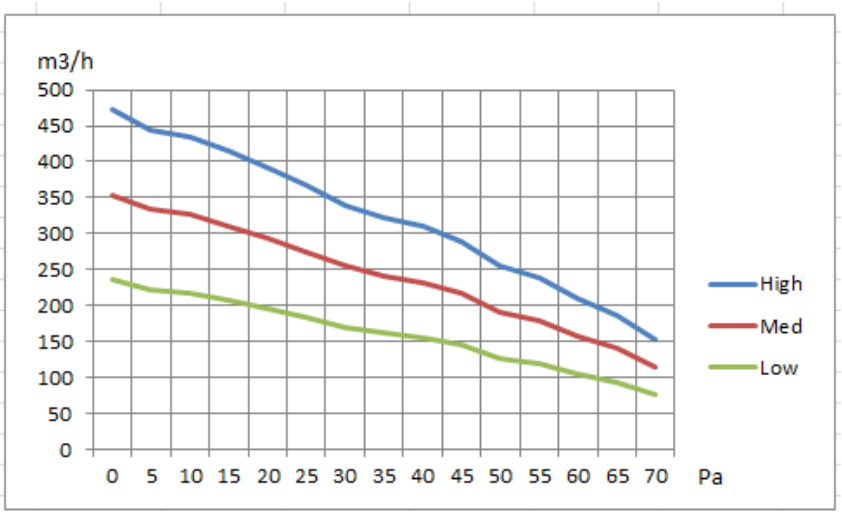

AFC-200HCL(R) / 4BA6M

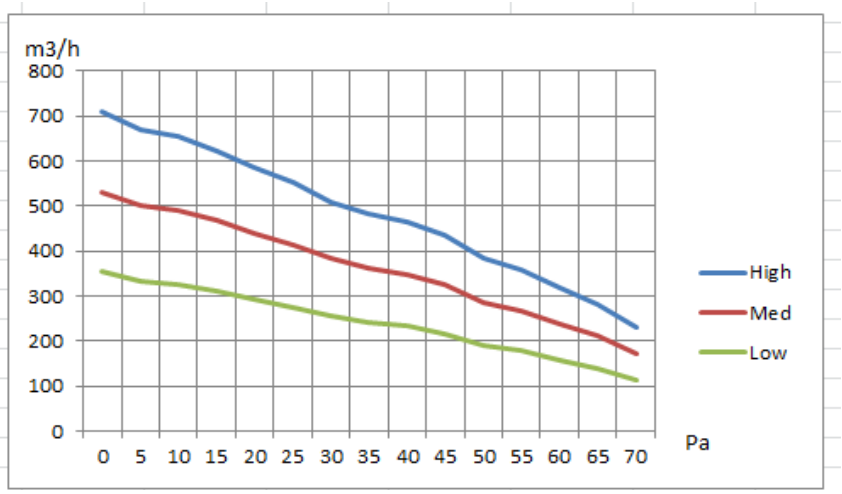

AFC-300HCL(R) / 4BA6M

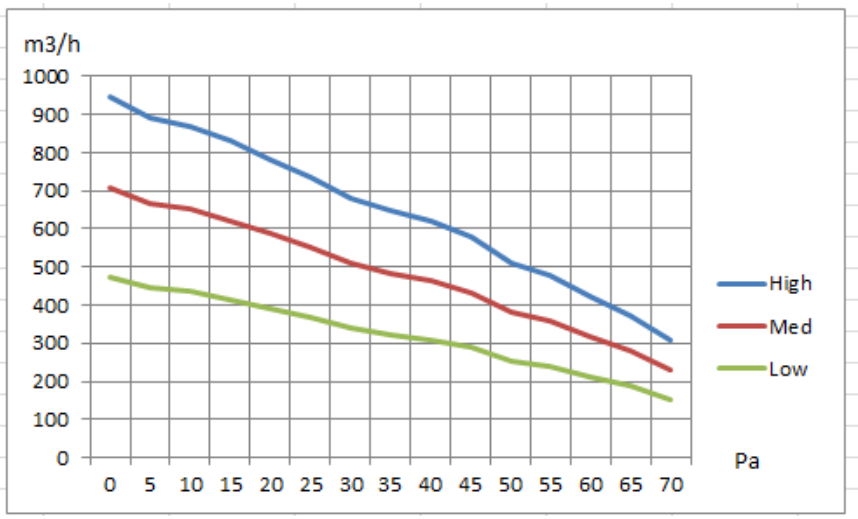

AFC-400HCL(R) / 4BA6M

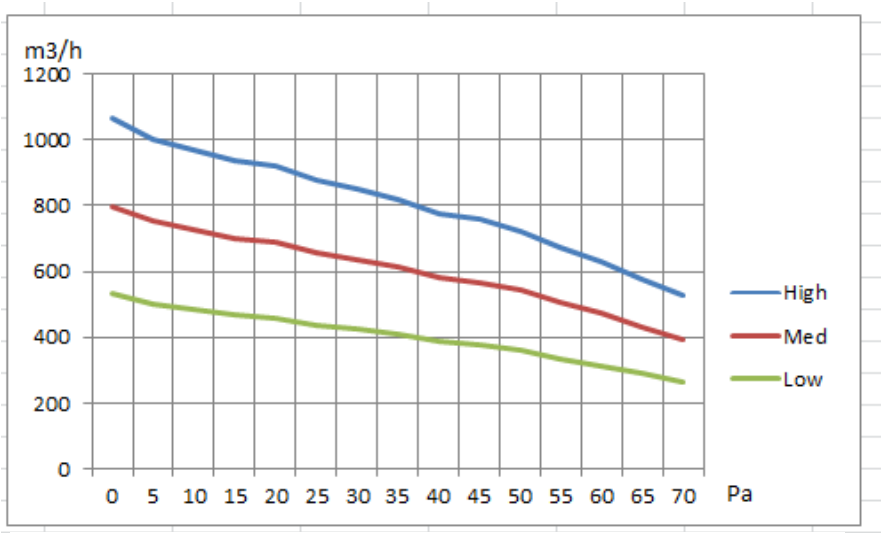

AFC-500HCL(R) / 4BA6M

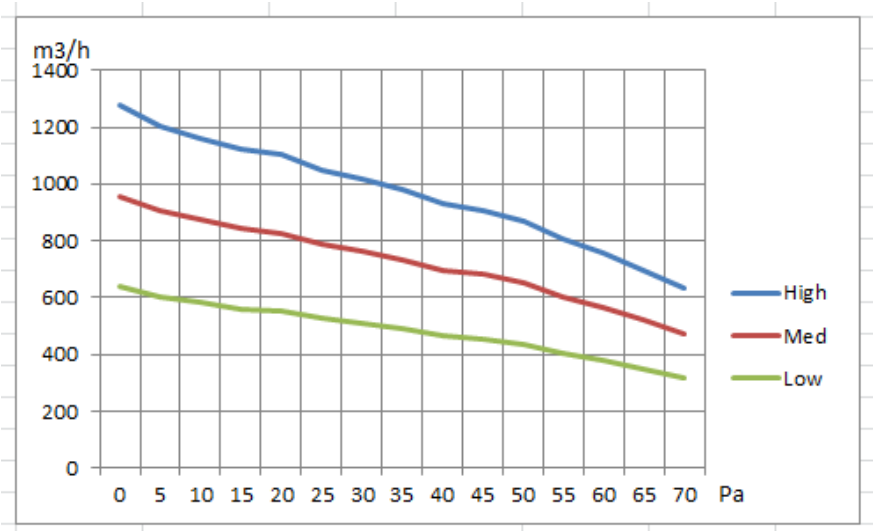

AFC-600HCL(R) / 4BA6M

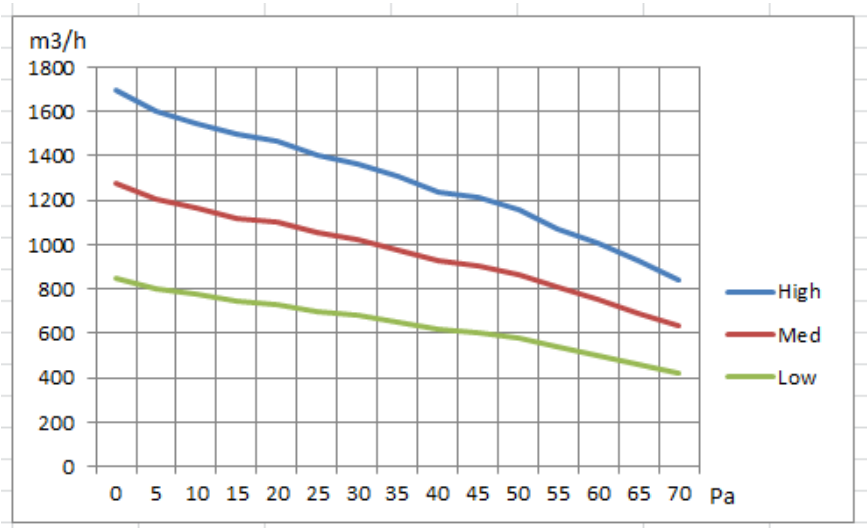

AFC-800HCL(R) / 4BA6M

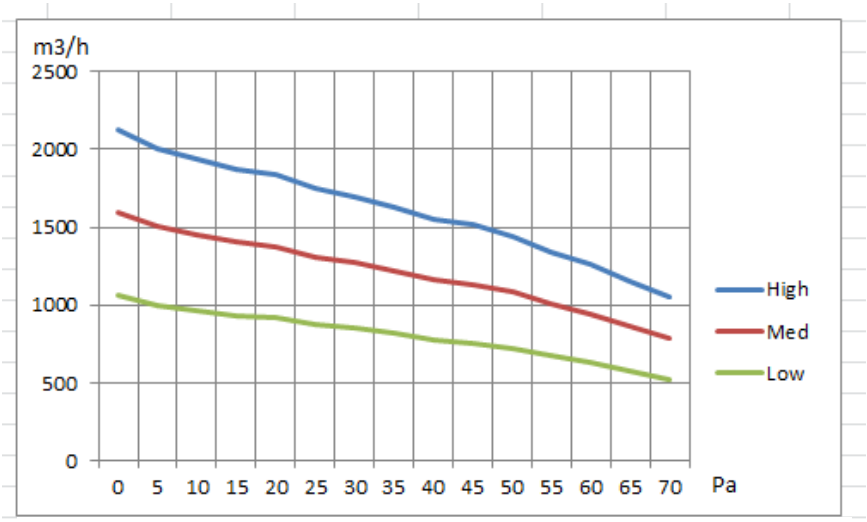

AFC-1000HCL(R) / 4BA6M

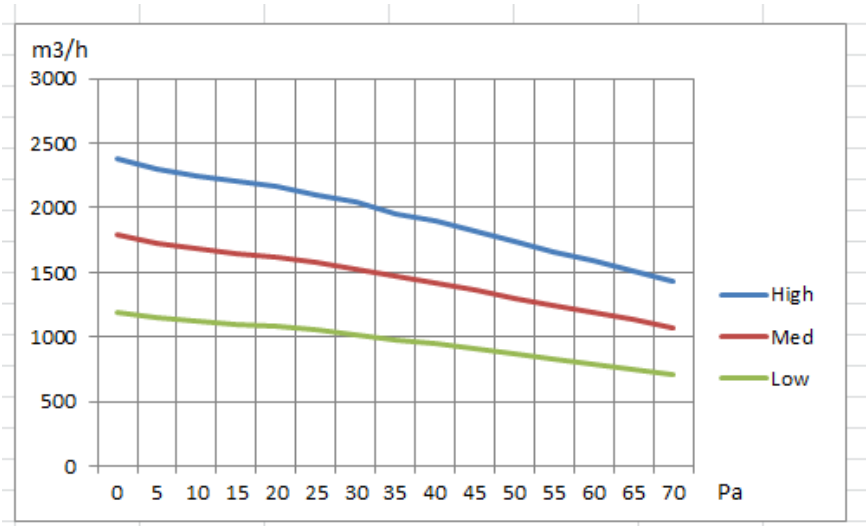

AFC-1200HCL(R) / 4BA6M

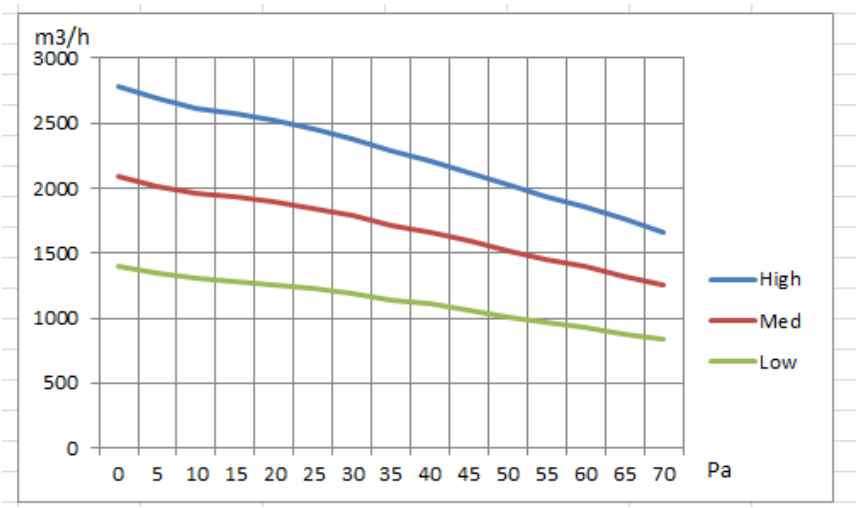

AFC-1400HCL(R) / 4BA6M

2. Unit Dimension

AFC-(200-1400)HCL(R)/4BA6M

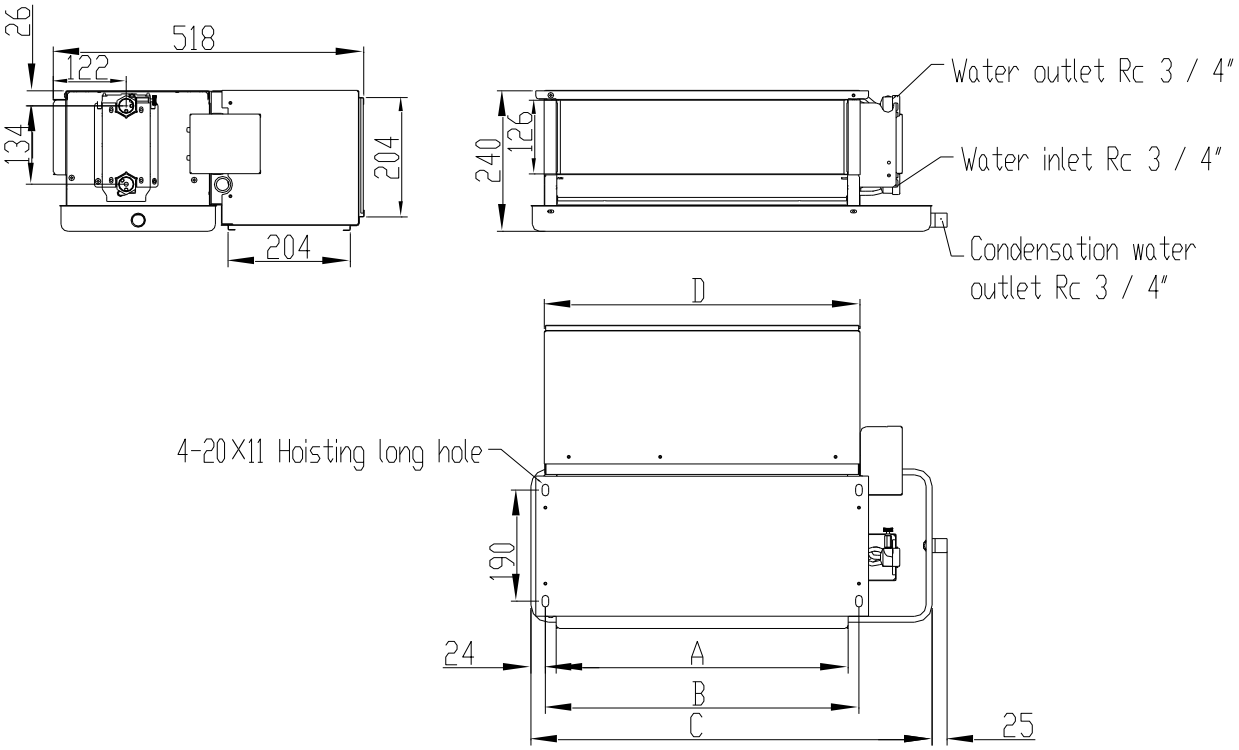

Model	A	B	C	D
AFC-200HCL(R)/4BA6M	487	523	669	522
AFC-300HCL(R)/4BA6M	687	723	869	722
AFC-400HCL(R)/4BA6M	687	723	869	722
AFC-500HCL(R)/4BA6M	832	868	1014	867
AFC-600HCL(R)/4BA6M	922	958	1104	957
AFC-800HCL(R)/4BA6M	1112	1148	1294	1147
AFC-1000HCL(R)/4BA6M	1512	1548	1694	1447
AFC-1200HCL(R)/4BA6M	1512	1548	1694	1547
AFC-1400HCL(R)/4BA6M	1702	1738	1884	1737

3. Optional components

Electric two way valve

4.

Electric three way valve

Y type water filter

Ball valve

Working principles of the system

The horizontal concealed fan coil unit is composed of the miniature ventilator, motor, coil (air heat exchanger), etc. and is one of the air conditioning terminal equipment. The cooling or heating water in the coil exchange heat with the outside air to adjust the indoor air parameters by cooling, dehumidifying or heating the air. The motor in the fan coil is the single phase capacitive regulating speed motor, and the air flow can be switched among the high, medium, and low speed by adjusting the input voltage of the motor, in which way the refrigerating or heating capacity can be adjusted.

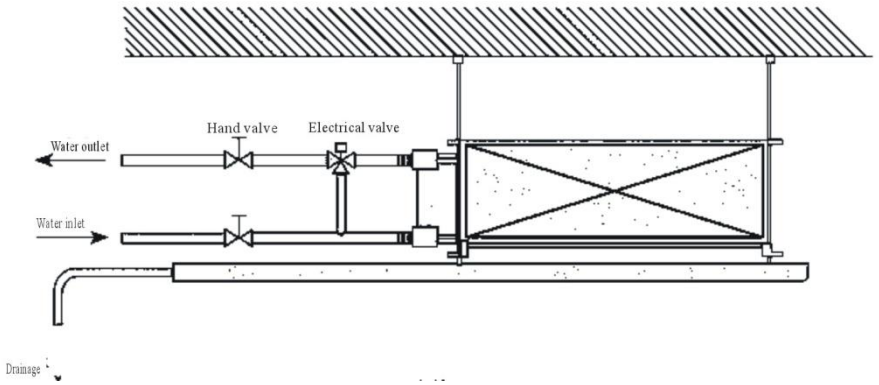

5. Product selection

5.1 Caution

1) The GB requirement for the fan coil selection

Each technical parameter of the fan coil has been confirmed in its standard, and part parameters of the standard are shown as following:

Main technical parameters of the fan coil unit standard

Code	Air volume	Cooling capacity	Heating capacity	Input power /W			Noise /dB(A)			Water resistance /k Pa
	（m3/h）	（W）	（W）	12Pa	30Pa	50Pa	12Pa	30Pa	50Pa	
AFC-200HCL(R)/4BA6M	340	1800	2700	37	44	49	37	40	42	30
AFC-300HCL(R)/4BA6M	510	2700	4050	52	59	66	39	42	44	30
AFC-400HCL(R)/4BA6M	680	3600	5400	62	72	84	41	44	46	30
AFC-500HCL(R)/4BA6M	850	4500	6750	76	87	100	43	46	47	30
AFC-600HCL(R)/4BA6M	1020	5400	8100	96	108	118	45	47	49	40
AFC-800HCL(R)/4BA6M	1360	7200	10800	134	156	174	46	48	50	40
AFC-1000HCL(R)/4BA6M	1700	9000	13500	152	174	210	48	50	52	40
AFC-1200HCL(R)/4BA6M	2040	10800	16200	189	212	250	50	52	54	40
AFC-1400HCL(R)/4BA6M	2380	12600	18900	228	253	300	52	54	56	50

2) If the air volume of the fan coil and the water supply temperature are certain, the refrigerating capacity varies with the water supply volume. According to the statistic for part of the product performance, the water supply volume will reduce to 80% of the original and the refrigerating capacity will reduce to 92% if the water supply temperature is 7℃, which indicates that the water supply volume variation exerts effort on the refrigerating capacity slowly.

3) The refrigerating capacity will decrease as the water supply rises if the difference between the water supply and return temperatures of the fan coil is certain. Based on the statistic, the refrigerating capacity will reduce by 10% or so, if the water supply temperature rises by 1℃, meanwhile, the higher the water supply temperature, the larger the decreasing amplitude, and the dehumidifying capacity will drop.

4) The refrigerating capacity and the air treatment enthalpy difference will vary with the change of the fan coil air volume as the water supply parameters are certain. Normally, the enthalpy will increase as the refrigerating capacity decreases and the fan loss for unit refrigerating capacity is changed little.

5) The water volume and the heat conduction coefficient will decrease as the difference between the fan coil inlet and outlet water temperatures increases. Besides, the temperature difference of the heat conduction is also changed, thus, the fan coil refrigerating capacity will decrease as the temperature difference between the supply and return water increases. Based on the statistic, if the temperature difference between the supply and return water rises from 5℃ to 7℃, the refrigerating capacity will drop by 17%, as the water supply temperature is 7℃.

The fan coil water supply volume, water supply temperature, temperature difference between the supply and return water, air volume, humidity and temperature of the intake air affect one another. The fan coil performance will be changed as one of the above varies.

6) If the fan coil runs in the standard work conditions, the air treatment end is the air treatment enthalpy difference. The refrigerating capacity of the fan coil relates to the indoor humid load. The higher the heat moisture ratio, the smaller the refrigerating capacity, as fig.1 and the air treatment enthalpy difference can be confirmed with the indoor heat moisture ratio curve, air treatment end parameter and the indoor air parameter. Then, the refrigerating capacity of the fan coil can be calculated according to the air treatment enthalpy difference with different indoor heat moisture ratio.

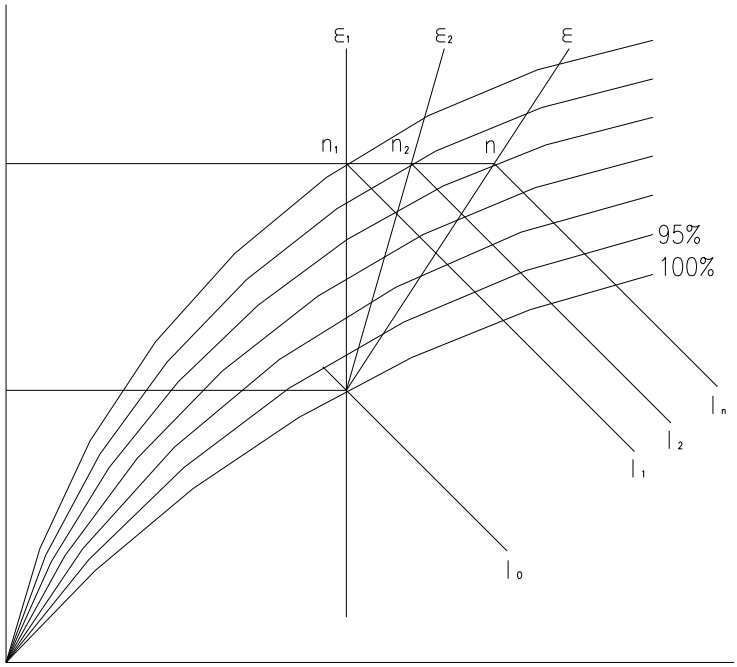

Fig.1 Air treatment process of the fan coil

5.2 Selection methods

5.2.1 Enthalpy difference amendment

The amendment is conducted with the ratio m of the enthalpy difference in the fan coil real run status to that in the standard work condition, and calculate the real refrigerating capacity of the fan coil, then select the fan coil based on the real refrigerating capacity.

Q`=QH·（△Im /△IH）
=mQH

And: Q`——The real refrigerating capacity of the fan coil (W)

QH——The rated refrigerating capacity of the fan coil in the standard work condition (W)

△ Im——The real air treatment enthalpy difference of the fan coil (W/kg)

△IH——The air treatment enthalpy difference of the fan coil in the standard work condition (W/kg)

m——The amendment coefficient

5.2.2 Model selection with the air volume

The air volume of the air conditioning is calculated with the cold load of the air conditioning and the real air treatment enthalpy difference of the fan coil.

G=Q/△Im（W）

And: G——The air volume of the air conditioning kg/h

Besides, the amendment should be conducted again based on the materials as the water supply temperature, the temperature difference of the supply and return water, the water supply volume, and the air inlet temperature of the air conditioning are different from those in the standard condition.

6. Unit explosion figure and spare part list

6.1 AFC-200HCL(R)/4BA6M explosion figure and spare part list

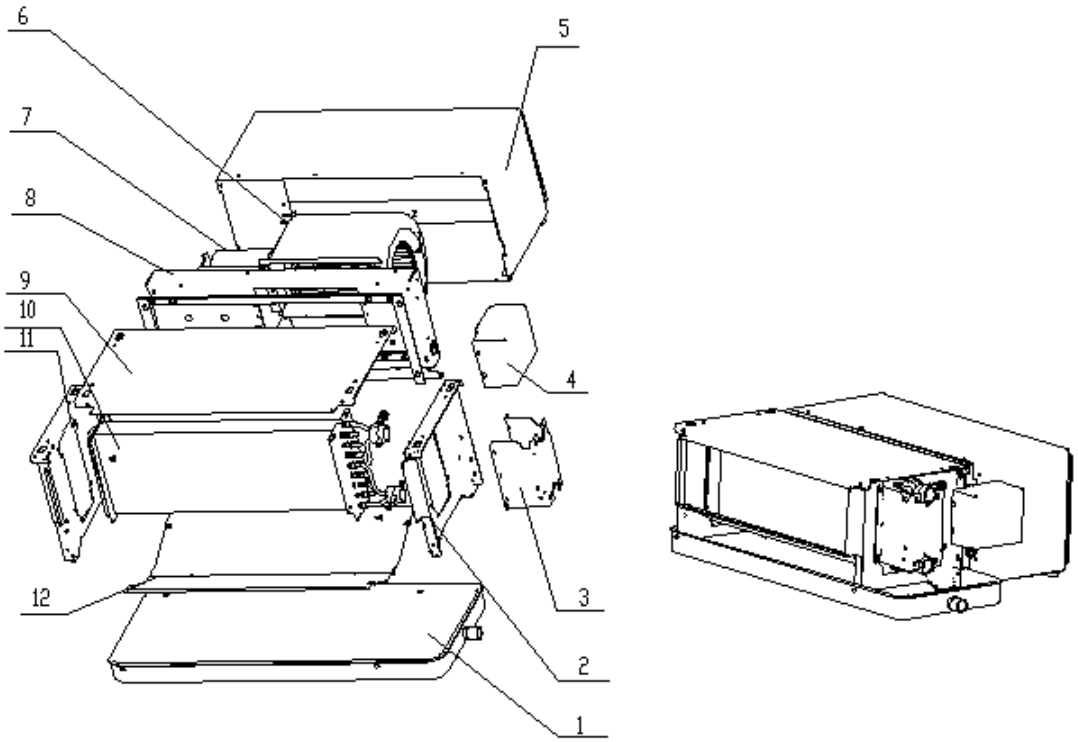

AFC-200HCL/4BA6M spare part list

N0.	Material code	Chinese name	Part Name	Quant.
1	16432014000064	接水盘 FP-34WAYH3/6 242×649 黑色	Wet pan 242×649	1
2	16421001000691	FP-34WAYH3/6 右侧安装板	Right mounting plate	1
3	16421014000085	FP-34WAYH3/6 阀板	Valve plate	1
4	16322012000042	FP-34WAYH3/6 电控总成(通用)	Electronic components	1
4.1	16421005000582	FP-34WA 电器盒盖	Electric control box cover	1

4.2	16421005000581	FP-34WA 电器元件安装板	Electrical installation board	1
4.3	11330010000088	R 风机电容 1.5μF/450VAC/70/2000h/P2	Capacitance 1.5μF/450VAC/70/2000h/P2	1
4.4	16427001000078	端子板 4 位/(600V 4mm2)123N(45 度双插片)	Terminal block 4	1
5	16321009000293	AFC-34HCLH3/BA6M 回风箱组件	Back to the bellows components	1
6	16444005000144	离心风机组件 SYP-150/200J(左式)	Centrifugal blower assembly	1
7	16430001000643	电机(三速) PG13B(34 风盘金属)	Motor PG13B	1
8	16421002000438	FPD-34WAYH3/6 蜗壳固定板(金属)	Volute fixed plate	1
9	16421005000594	AFC-34HCLH3/BA6M 顶盖板	Top cover inclined	1
10	16324012000253	FPD-34WAYH3/6 表冷器总成(三排宽片 1.4)	Heat exchanger assembly	1
11	16421001000690	FP-34WAYH3/6 左侧安装板	Left mounting plate	1
12	16421028000174	FP-34WAYH3/6 底盘	Baseplate	1

AFC-200HCR/4BA6M spare part list

N0.	Material code	Chinese name	Part Name	Quantity
1	16432014000064	接水盘 FP-34WAYH3/6 242×649 黑色	Wet pan 242×649	1
2	16421001000691	FP-34WAYH3/6 右侧安装板	Right mounting plate	1
3	16421014000085	FP-34WAYH3/6 阀板	Valve plate	1
4	16322012000042	FP-34WAYH3/6 电控总成(通用)	Electronic components	1
4.1	16421005000582	FP-34WA 电器盒盖	Electric control box cover	1
4.2	16421005000581	FP-34WA 电器元件安装板	Electrical installation board	1
4.3	11330010000088	R 风机电容 1.5μF/450VAC/70/2000h/P2	Capacitance 1.5μF/450VAC/70/2000h/P2	1
4.4	16427001000078	端子板 4 位/(600V 4mm2)123N(45 度双插片)	Terminal block 4	1
5	16321009000293	AFC-34HCLH3/BA6M 回风箱组件	Back to the bellows components	1
6	16444005000144	离心风机组件 SYP-150/200J(左式)	Centrifugal blower assembly	1
7	16430001000643	电机(三速) PG13B(34 风盘金属)	Motor PG13B	1
8	16421002000438	FPD-34WAYH3/6 蜗壳固定板(金属)	Volute fixed plate	1
9	16421005000594	AFC-34HCLH3/BA6M 顶盖板	Top cover inclined	1
10	16324012000253	FPD-34WAYH3/6 表冷器总成(三排宽片 1.4)	Heat exchanger assembly	1
11	16421001000690	FP-34WAYH3/6 左侧安装板	Left mounting plate	1
12	16421028000174	FP-34WAYH3/6 底盘	Baseplate	1

6.2 AFC-300HCL(R)/4BA6M, AFC-400HCL(R)/4BA6M, AFC-500HCL(R)/4BA6M, AFC-600HCL(R)/4BA6M Explosion figure and spare part list

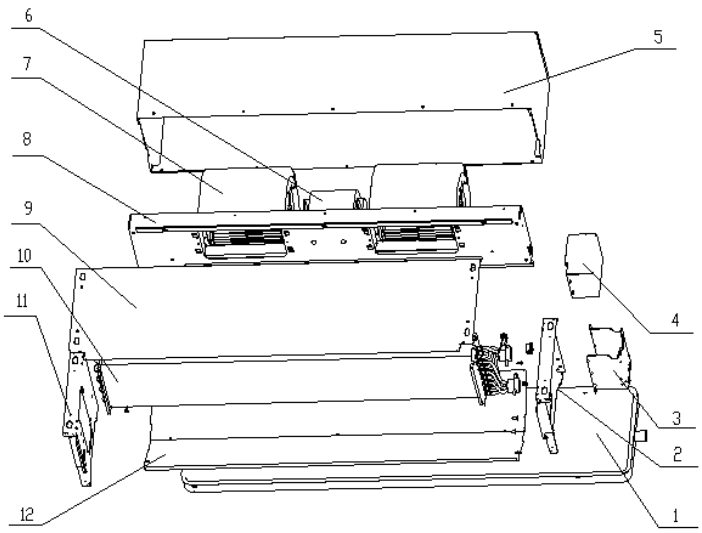

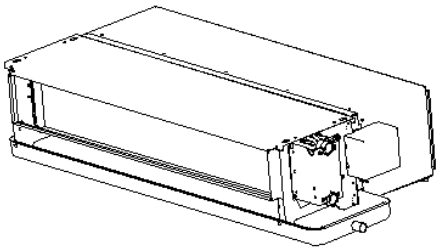

AFC-300HCL/4BA6M spare part list

N0.	Material code	Chinese name	Part Name	Quantity
1	16432014000065	接水盘 FP-51WAYH3/6 242×849 黑色	Wet pan 242×849	1
2	16421001000691	FP-34WAYH3/6 右侧安装板	Right mounting plate	1
3	16421014000085	FP-34WAYH3/6 阀板	Valve plate	1
4	16322012000042	FP-34WAYH3/6 电控总成(通用)	Electronic components	1
4.1	16421005000582	FP-34WA 电器盒盖	Electric control box cover	1
4.2	16421005000581	FP-34WA 电器元件安装板	Electrical installation board	1
4.3	11330010000089	R 风机电容 2.0μF/450VAC/70/2000h/P2	Capacitance 2.0μF/450VAC/70/2000h/P2	1
4.4	16427001000078	端子板 4 位/(600V 4mm2)123N(45 度双插片)	Terminal block 4	1
5	16321009000294	AFC-51HCLH3/BA6M 回风箱组件	Back to the bellows components	1
6	16430001000644	电机(三速) PG20B(51 风盘金属)	Motor PG20B	1
7	16444005000144	离心风机组件 SYP-150/200J(左式)或(右式)	Centrifugal blower assembly	2
8	16421002000439	FPD-51WAYH3/6 蜗壳固定板(金属)	Volute fixed plate	1
9	16421005000595	AFC-51HCLH3/BA6M 顶盖板	Top cover inclined	1
10	16324012000257	FPD-51WAZH3/6 表冷器总成(三排宽片 1.4)	Heat exchanger assembly	1
11	16421001000690	FP-34WAYH3/6 左侧安装板	Left mounting plate	1
12	16421028000175	FP-51WAYH3/6 底盘	Baseplate	1

AFC-300HCR/4BA6M spare part list

N0.	Material code	Chinese name	Part Name	Quantity
1	16432014000065	接水盘 FP-51WAYH3/6 242×849 黑色	Wet pan 242×849	1
2	16421001000691	FP-34WAYH3/6 右侧安装板	Right mounting plate	1
3	16421014000085	FP-34WAYH3/6 阀板	Valve plate	1
4	16322012000042	FP-34WAYH3/6 电控总成(通用)	Electronic components	1
4.1	16421005000582	FP-34WA 电器盒盖	Electric control box cover	1
4.2	16421005000581	FP-34WA 电器元件安装板	Electrical installation board	1
4.3	11330010000089	R 风机电容 2.0μF/450VAC/70/2000h/P2	Capacitance 2.0μF/450VAC/70/2000h/P2	1
4.4	16427001000078	端子板 4 位/(600V 4mm2)123N(45 度双插片)	Terminal block 4	1

5	16321009000294	AFC-51HCLH3/BA6M 回风箱组件	Back to the bellows components	1
6	16430001000644	电机(三速) PG20B(51 风盘金属)	Motor PG20B	1
7	16444005000144	离心风机组件 SYP-150/200J(左式)或(右式)	Centrifugal blower assembly	2
8	16421002000439	FPD-51WAYH3/6 蜗壳固定板(金属)	Volute fixed plate	1
9	16421005000595	AFC-51HCLH3/BA6M 顶盖板	Top cover inclined	1
10	16324012000258	FPD-51WAYH3/6 表冷器总成(三排宽片 1.4)	Heat exchanger assembly	1
11	16421001000690	FP-34WAYH3/6 左侧安装板	Left mounting plate	1
12	16421028000175	FP-51WAYH3/6 底盘	Baseplate	1

AFC-400HCL/4BA6M spare part list

N0.	Material code	Chinese name	Part Name	Quantity
1	16432014000065	接水盘 FP-51WAYH3/6 242×849 黑色	Wet pan 242×849	1
2	16421001000691	FP-34WAYH3/6 右侧安装板	Right mounting plate	1
3	16421014000085	FP-34WAYH3/6 阀板	Valve plate	1
4	16322012000042	FP-34WAYH3/6 电控总成(通用)	Electronic components	1
4.1	16421005000582	FP-34WA 电器盒盖	Electric control box cover	1
4.2	16421005000581	FP-34WA 电器元件安装板	Electrical installation board	1
4.3	11330010000089	R 风机电容 2.0μF/450VAC/70/2000h/P2	Capacitance 2.0μF/450VAC/70/2000h/P2	1
4.4	16427001000078	端子板 4 位/(600V 4mm2)123N(45 度双插片)	Terminal block 4	1
5	16321009000294	AFC-51HCLH3/BA6M 回风箱组件	Back to the bellows components	1
6	16430001000645	电机(三速) PG30B(68 风盘金属)	Motor PG30B	1
7	16444005000144	离心风机组件 SYP-150/200J(左式)或（右式）	Centrifugal blower assembly	2
8	16421002000439	FPD-51WAYH3/6 蜗壳固定板(金属)	Volute fixed plate	1
9	16421005000595	AFC-51HCLH3/BA6M 顶盖板	Top cover inclined	1
10	16324012000257	FPD-51WAZH3/6 表冷器总成(三排宽片 1.4)	Heat exchanger assembly	1
11	16421001000690	FP-34WAYH3/6 左侧安装板	Left mounting plate	1
12	16421028000175	FP-51WAYH3/6 底盘	Baseplate	1

AFC-400HCR/4BA6M spare part list

N0.	Material code	Chinese name	Part Name	Quantity
1	16432014000065	接水盘 FP-51WAYH3/6 242×849 黑色	Wet pan 242×849	1
2	16421001000691	FP-34WAYH3/6 右侧安装板	Right mounting plate	1
3	16421014000085	FP-34WAYH3/6 阀板	Valve plate	1
4	16322012000042	FP-34WAYH3/6 电控总成(通用)	Electronic components	1
4.1	16421005000582	FP-34WA 电器盒盖	Electric control box cover	1
4.2	16421005000581	FP-34WA 电器元件安装板	Electrical installation board	1
4.3	11330010000089	R 风机电容 2.0μF/450VAC/70/2000h/P2	Capacitance 2.0μF/450VAC/70/2000h/P2	1
4.4	16427001000078	端子板 4 位/(600V 4mm2)123N(45 度双插片)	Terminal block 4	1
5	16321009000294	AFC-51HCLH3/BA6M 回风箱组件	Back to the bellows components	1
6	16430001000645	电机(三速) PG30B(68 风盘金属)	Motor PG30B	1
7	16444005000144	离心风机组件 SYP-150/200J(左式)或（右式）	Centrifugal blower assembly	2
8	16421002000439	FPD-51WAYH3/6 蜗壳固定板(金属)	Volute fixed plate	1

9	16421005000595	AFC-51HCLH3/BA6M 顶盖板	Top cover inclined	1
10	16324012000258	FPD-51WAYH3/6 表冷器总成(三排宽片 1.4)	Heat exchanger assembly	1
11	16421001000690	FP-34WAYH3/6 左侧安装板	Left mounting plate	1
12	16421028000175	FP-51WAYH3/6 底盘	Baseplate	1

AFC-500HCL/4BA6M spare part list

N0.	Material code	Chinese name	Part Name	Quantity
1	16432014000066	接水盘 FP-85WAYH3/6 242×994 黑色	Wet pan 242×994	1
2	16421001000691	FP-34WAYH3/6 右侧安装板	Right mounting plate	1
3	16421014000085	FP-34WAYH3/6 阀板	Valve plate	1
4	16322012000042	FP-34WAYH3/6 电控总成(通用)	Electronic components	1
4.1	16421005000582	FP-34WA 电器盒盖	Electric control box cover	1
4.2	16421005000581	FP-34WA 电器元件安装板	Electrical installation board	1
4.3	11330010000090	R 风机电容 2.5μF/450VAC/70/2000h/P2	Capacitance 2.5μF/450VAC/70/2000h/P2	1
4.4	16427001000078	端子板 4 位/(600V 4mm2)123N(45 度双插片)	Terminal block 4	1
5	16321009000295	AFC-85HCLH3/BA6M 回风箱组件	Back to the bellows components	1
6	16430001000646	电机(三速) PG40B(85/170 风盘金属)	Motor PG40B	1
7	16444005000144	离心风机组件 SYP-150/200J(左式)或（右式）	Centrifugal blower assembly	2
8	16421002000441	FPD-85WAYH3/6 蜗壳固定板(金属)	Volute fixed plate	1
9	16421005000596	AFC-85HCLH3/BA6M 顶盖板	Top cover inclined	1
10	16324012000265	FPD-85WAZH3/6 表冷器总成(三排宽片 1.4)	Heat exchanger assembly	1
11	16421001000690	FP-34WAYH3/6 左侧安装板	Left mounting plate	1
12	16421028000176	FP-85WAYH3/6 底盘	Baseplate	1

AFC-500HCR/4BA6M spare part list

N0.	Material code	Chinese name	Part Name	Quantity
1	16432014000066	接水盘 FP-85WAYH3/6 242×994 黑色	Wet pan 242×994	1
2	16421001000691	FP-34WAYH3/6 右侧安装板	Right mounting plate	1
3	16421014000085	FP-34WAYH3/6 阀板	Valve plate	1
4	16322012000042	FP-34WAYH3/6 电控总成(通用)	Electronic components	1
4.1	16421005000582	FP-34WA 电器盒盖	Electric control box cover	1
4.2	16421005000581	FP-34WA 电器元件安装板	Electrical installation board	1
4.3	11330010000090	R 风机电容 2.5μF/450VAC/70/2000h/P2	Capacitance 2.5μF/450VAC/70/2000h/P2	1
4.4	16427001000078	端子板 4 位/(600V 4mm2)123N(45 度双插片)	Terminal block 4	1
5	16321009000295	AFC-85HCLH3/BA6M 回风箱组件	Back to the bellows components	1
6	16430001000646	电机(三速) PG40B(85/170 风盘金属)	Motor PG40B	1
7	16444005000144	离心风机组件 SYP-150/200J(左式)或（右式）	Centrifugal blower assembly	2
8	16421002000441	FPD-85WAYH3/6 蜗壳固定板(金属)	Volute fixed plate	1
9	16421005000596	AFC-85HCLH3/BA6M 顶盖板	Top cover inclined	1
10	16324012000266	FPD-85WAYH3/6 表冷器总成(三排宽片 1.4)	Heat exchanger assembly	1
11	16421001000690	FP-34WAYH3/6 左侧安装板	Left mounting plate	1
12	16421028000176	FP-85WAYH3/6 底盘	Baseplate	1

AFC-600HCL/4BA6M spare part list

N0.	Material code	Chinese name	Part Name	Quantity
1	16432014000067	接水盘 FP-102WAYH3/6 242×1084 黑色	Wet pan 242×1084	1
2	16421001000691	FP-34WAYH3/6 右侧安装板	Right mounting plate	1
3	16421014000085	FP-34WAYH3/6 阀板	Valve plate	1
4	16322012000042	FP-34WAYH3/6 电控总成(通用)	Electronic components	1
4.1	16421005000582	FP-34WA 电器盒盖	Electric control box cover	1
4.2	16421005000581	FP-34WA 电器元件安装板	Electrical installation board	1
4.3	11330010000091	R 风机电容 3.0μF/450VAC/70/2000h/P2	Capacitance 3.0μF/450VAC/70/2000h/P2	1
4.4	16427001000078	端子板 4 位/(600V 4mm2)123N(45 度双插片)	Terminal block 4	1
5	16321009000293	AFC-102HCLH3/BA6M 回风箱组件	Back to the bellows components	1
6	16430001000647	电机(三速) PG55B(102/204 风盘金属)	Motor PG55B	1
7	16444005000144	离心风机组件 SYP-150/200J(左式)或(右式)	Centrifugal blower assembly	2
8	16421002000442	FPD-102WAYH3/6 蜗壳固定板(金属)	Volute fixed plate	1
9	16421005000597	AFC-102HCLH3/BA6M 顶盖板	Top cover inclined	1
10	16324012000270	FPD-102WAZH3/6 表冷器总成(三排宽片 1.4)	Heat exchanger assembly	1
11	16421001000690	FP-34WAYH3/6 左侧安装板	Left mounting plate	1
12	16421028000177	FP-102WAYH3/6 底盘	Baseplate	1

AFC-600HCR/4BA6M spare part list

N0.	Material code	Chinese name	Part Name	Quantity
1	16432014000067	接水盘 FP-102WAYH3/6 242×1084 黑色	Wet pan 242×1084	1
2	16421001000691	FP-34WAYH3/6 右侧安装板	Right mounting plate	1
3	16421014000085	FP-34WAYH3/6 阀板	Valve plate	1
4	16322012000042	FP-34WAYH3/6 电控总成(通用)	Electronic components	1
4.1	16421005000582	FP-34WA 电器盒盖	Electric control box cover	1
4.2	16421005000581	FP-34WA 电器元件安装板	Electrical installation board	1
4.3	11330010000091	R 风机电容 3.0μF/450VAC/70/2000h/P2	Capacitance 3.0μF/450VAC/70/2000h/P2	1
4.4	16427001000078	端子板 4 位/(600V 4mm2)123N(45 度双插片)	Terminal block 4	1
5	16321009000293	AFC-102HCLH3/BA6M 回风箱组件	Back to the bellows components	1
6	16430001000647	电机(三速) PG55B(102/204 风盘金属)	Motor PG55B	1
7	16444005000144	离心风机组件 SYP-150/200J(左式)或(右式)	Centrifugal blower assembly	2
8	16421002000442	FPD-102WAYH3/6 蜗壳固定板(金属)	Volute fixed plate	1
9	16421005000597	AFC-102HCLH3/BA6M 顶盖板	Top cover inclined	1
10	16324012000271	FPD-102WAYH3/6 表冷器总成(三排宽片 1.4)	Heat exchanger assembly	1
11	16421001000690	FP-34WAYH3/6 左侧安装板	Left mounting plate	1
12	16421028000177	FP-102WAYH3/6 底盘	Baseplate	1

6.3 AFC-800HCL(R)/4BA6M

Explosion figure and spare part list

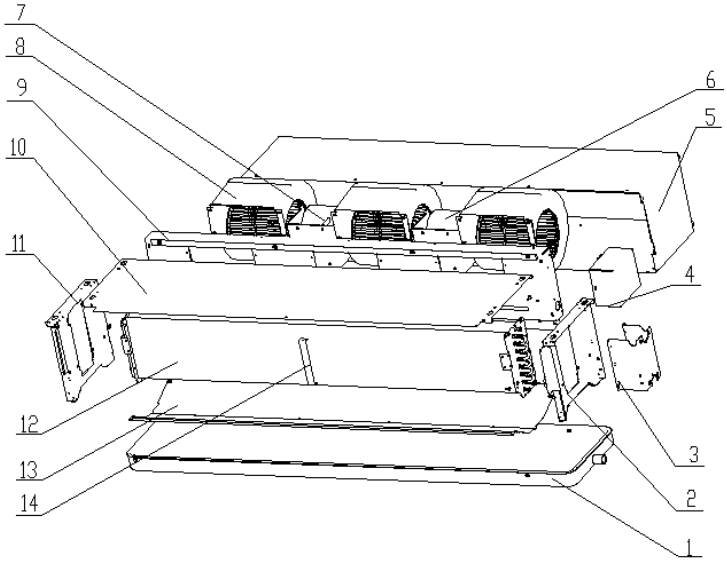

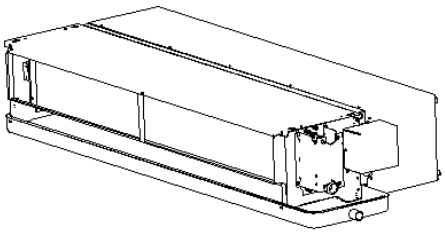

AFC-800HCL/4BA6M spare part list

N0.	Material code	Chinese name	Part Name	Quantity
1	16432014000068	接水盘 FP-136WAYH3/6 242×1274 黑色	Wet pan 242×1274	1
2	16421001000691	FP-34WAYH3/6 右侧安装板	Right mounting plate	1
3	16421014000085	FP-34WAYH3/6 阀板	Valve plate	1
4	16322012000042	FP-34WAYH3/6 电控总成(通用)	Electronic components	1
4.1	16421005000582	FP-34WA 电器盒盖	Electric control box cover	1
4.2	16421005000581	FP-34WA 电器元件安装板	Electrical installation board	1
4.3	11330010000089	R 风机电容 2.0μF/450VAC/70/2000h/P2	Capacitance 2.0μF/450VAC/70/2000h/P2	1
4.4	11330010000091	R 风机电容 3.0μF/450VAC/70/2000h/P2	Capacitance 3.0μF/450VAC/70/2000h/P2	1
4.5	16427001000078	端子板 4 位/(600V 4mm2)123N(45 度双插片)	Terminal block 4	1
5	16321009000297	AFC-136HCLH3/BA6M 回风箱组件	Back to the bellows components	1
6	16430001000643	电机(三速) PG13B(34 风盘金属)	Motor PG13B	1
7	16430001000647	电机(三速) PG55B(102/204 风盘金属)	Motor PG55B	1
8	16444005000141	离心风机组件 SYP-150/150J(左式)(整合)	Centrifugal blower assembly	3
9	16421002000443	FPD-136WAYH3/6 蜗壳固定板(金属)	Volute fixed plate	1
10	16421005000598	AFC-136HCLH3/BA6M 顶盖板	Top cover inclined	1
11	16324012000273	FPD-136WAZH3/6 表冷器总成(三排宽片 1.4)	Heat exchanger assembly	1
12	16421001000690	FP-34WAYH3/6 左侧安装板	Left mounting plate	1
13	16421028000178	FP-136WAYH3/6 底盘	Baseplate	1
14	16421026000336	FP-170WAYH3/6 风口支撑板	Fan support stands	1

AFC-800HCR/4BA6M spare part list

N0.	Material code	Chinese name	Part Name	Quantity
1	16432014000068	接水盘 FP-136WAYH3/6 242×1274 黑色	Wet pan 242×1274	1
2	16421001000691	FP-34WAYH3/6 右侧安装板	Right mounting plate	1

3	16421014000085	FP-34WAYH3/6 阀板	Valve plate	1
4	16322012000042	FP-34WAYH3/6 电控总成(通用)	Electronic components	1
4.1	16421005000582	FP-34WA 电器盒盖	Electric control box cover	1
4.2	16421005000581	FP-34WA 电器元件安装板	Electrical installation board	1
4.3	11330010000089	R 风机电容 2.0μF/450VAC/70/2000h/P2	Capacitance 2.0μF/450VAC/70/2000h/P2	1
4.4	11330010000091	R 风机电容 3.0μF/450VAC/70/2000h/P2	Capacitance 3.0μF/450VAC/70/2000h/P2	1
4.5	16427001000078	端子板 4 位/(600V 4mm2)123N(45 度双插片)	Terminal block 4	1
5	16321009000297	AFC-136HCLH3/BA6M 回风箱组件	Back to the bellows components	1
6	16430001000643	电机(三速) PG13B(34 风盘金属)	Motor PG13B	1
7	16430001000647	电机(三速) PG55B(102/204 风盘金属)	Motor PG55B	1
8	16444005000141	离心风机组件 SYP-150/150J(左式)(整合)	Centrifugal blower assembly	3
9	16421002000443	FPD-136WAYH3/6 蜗壳固定板(金属)	Volutefixed plate	1
10	16421005000598	AFC-136HCLH3/BA6M 顶盖板	Top cover inclined	1
11	16324012000274	FPD-136WAYH3/6 表冷器总成(三排宽片 1.4)	Heat exchanger assembly	1
12	16421001000690	FP-34WAYH3/6 左侧安装板	Leftmounting plate	1
13	16421028000178	FP-136WAYH3/6 底盘	Baseplate	1

6.4 AFC-1000HCL(R)/4BA6M, AFC-1200HCL(R)/4BA6M, AFC-1400HCL(R)/4BA6M Explosion figure and spare part list

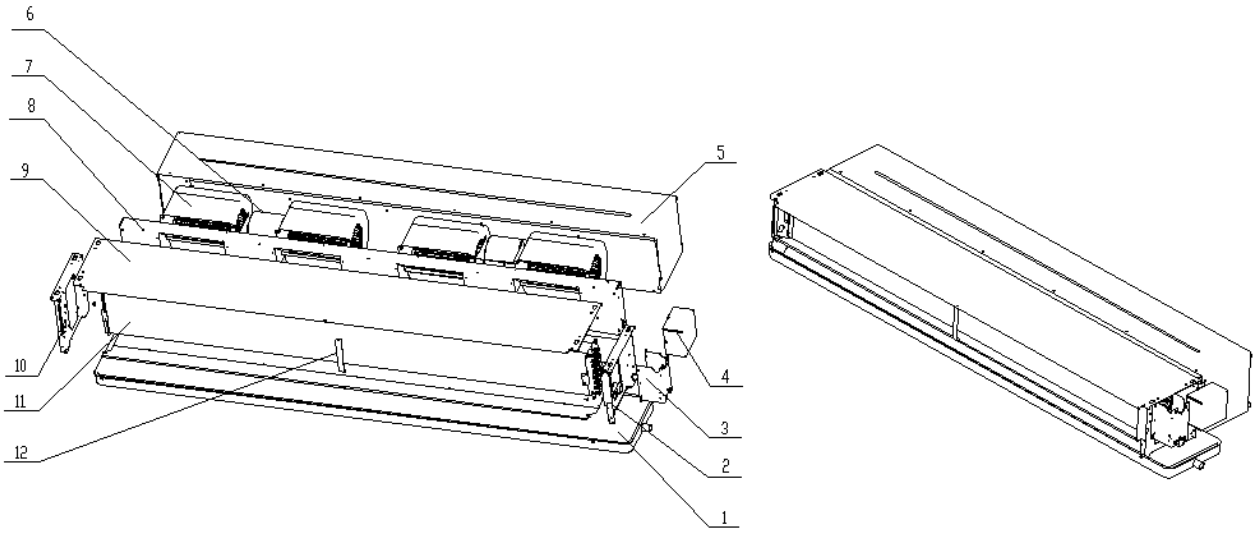

AFC-1000HCL/4BA6M spare part list

N0.	Material code	Chinese name	Part Name	Quantity
1	16432014000069	接水盘 FP-170WAYH3/6 242×1574 黑色	Wet pan 242×1574	1
2	16421001000691	FP-34WAYH3/6 右侧安装板	Right mounting plate	1
3	16421014000085	FP-34WAYH3/6 阀板	Valve plate	1
4	16322012000042	FP-34WAYH3/6 电控总成(通用)	Electronic components	1
4.1	16421005000582	FP-34WA 电器盒盖	Electric control box cover	1
4.2	16421005000581	FP-34WA 电器元件安装板	Electrical installation board	1
4.3	11330010000090	R 风机电容 2.5μF/450VAC/70/2000h/P2	Capacitance 2.5μF/450VAC/70/2000h/P2	2
4.4	16427001000078	端子板 4 位/(600V 4mm2)123N(45 度双插片)	Terminal block 4	1
5	16321009000297	AFC-170HCLH3/BA6M 回风箱组件	Back to the bellows components	1
6	16430001000646	电机(三速) PG40B(85/170 风盘金属)	Motor PG 40B	2
7	16444005000144	离心风机组件 SYP-150/200J(左式)或（右式）	Centrifugal blower assembly	4
8	16421002000445	FPD-204WAYH3/6 蜗壳固定板(金属)	Volute fixed plate	1
9	16421005000599	AFC-170HCLH3/BA6M 顶盖板	Top cover inclined	1
10	16324012000281	FPD-204WAZH3/6 表冷器总成(三排宽片 1.4)	Heat exchanger assembly	1
11	16421001000690	FP-34WAYH3/6 左侧安装板	Left mounting plate	1
12	16421028000179	FP-170WAYH3/6 底盘	Baseplate	1
13	16421026000336	FP-170WAYH3/6 风口支撑板	Fan support stands	1

AFC-1000HCR/4BA6M spare part list

N0.	Material code	Chinese name	Part Name	Quantity
1	16432014000069	接水盘 FP-170WAYH3/6 242×1574 黑色	Wet pan 242×1574	1
2	16421001000691	FP-34WAYH3/6 右侧安装板	Right mounting plate	1
3	16421014000085	FP-34WAYH3/6 阀板	Valve plate	1
4	16322012000042	FP-34WAYH3/6 电控总成(通用)	Electronic components	1
4.1	16421005000582	FP-34WA 电器盒盖	Electric control box cover	1
4.2	16421005000581	FP-34WA 电器元件安装板	Electrical installation board	1
4.3	11330010000090	R 风机电容 2.5μF/450VAC/70/2000h/P2	Capacitance 2.5μF/450VAC/70/2000h/P2	2
4.4	16427001000078	端子板 4 位/(600V 4mm2)123N(45 度双插片)	Terminal block 4	1
5	16321009000297	AFC-170HCLH3/BA6M 回风箱组件	Back to the bellows components	1
6	16430001000646	电机(三速) PG40B(85/170 风盘金属)	Motor PG 40B	1
7	16346001000001	离心风轮组件 150/175(铁壳电机φ12/ABS)	Centrifugal blower assembly	4
8	16321012000205	FPD-204WAYH3/6 蜗壳固定板组件(金属)	Volute fixed plate	1
9	16421005000599	AFC-170HCLH3/BA6M 顶盖板	Top cover inclined	1
10	16324012000282	FPD-204WAYH3/6 表冷器总成(三排宽片 1.4)	Heat exchanger assembly	1
11	16421001000690	FP-34WAYH3/6 左侧安装板	Left mounting plate	1
12	16421028000179	FP-170WAYH3/6 底盘	Baseplate	1
13	16421026000336	FP-170WAYH3/6 风口支撑板	Fan support stands	1

AFC-1200HCL/4BA6M spare part list

N0.	Material code	Chinese name	Part Name	Quantity
1	16432014000069	接水盘 FP-170WAYH3/6 242×1574 黑色	Wet pan 242×1574	1
2	16421001000691	FP-34WAYH3/6 右侧安装板	Right mounting plate	1
3	16421014000085	FP-34WAYH3/6 阀板	Valve plate	1
4	16322012000042	FP-34WAYH3/6 电控总成(通用)	Electronic components	1
4.1	16421005000582	FP-34WA 电器盒盖	Electric control box cover	1
4.2	16421005000581	FP-34WA 电器元件安装板	Electrical installation board	1
4.3	11330010000090	R 风机电容 2.5μF/450VAC/70/2000h/P2	Capacitance 2.5μF/450VAC/70/2000h/P2	2
4.4	16427001000078	端子板 4 位/(600V 4mm2)123N(45 度双插片)	Terminal block 4	1
5	16321009000297	AFC-170HCLH3/BA6M 回风箱组件	Back to the bellows components	1
6	16430001000646	电机(三速) PG40B(85/170 风盘金属)	Motor PG 40B	2
7	16444005000144	离心风机组件 SYP-150/200J(左式)或（右式）	Centrifugal blower assembly	4
8	16421002000445	FPD-204WAYH3/6 蜗壳固定板(金属)	Volute fixed plate	1
9	16421005000599	AFC-170HCLH3/BA6M 顶盖板	Top cover inclined	1
10	16324012000281	FPD-204WAZH3/6 表冷器总成(三排宽片 1.4)	Heat exchanger assembly	1
11	16421001000690	FP-34WAYH3/6 左侧安装板	Left mounting plate	1
12	16421028000179	FP-170WAYH3/6 底盘	Baseplate	1
13	16421026000336	FP-170WAYH3/6 风口支撑板	Fan support stands	1

AFC-1200HCR/4BA6M spare part list

N0.	Material code	Chinese name	Part Name	Quantity
1	16432014000069	接水盘 FP-170WAYH3/6 242×1574 黑色	Wet pan 242×1574	1
2	16421001000691	FP-34WAYH3/6 右侧安装板	Right mounting plate	1
3	16421014000085	FP-34WAYH3/6 阀板	Valve plate	1
4	16322012000042	FP-34WAYH3/6 电控总成(通用)	Electronic components	1
4.1	16421005000582	FP-34WA 电器盒盖	Electric control box cover	1
4.2	16421005000581	FP-34WA 电器元件安装板	Electrical installation board	1
4.3	11330010000090	R 风机电容 2.5μF/450VAC/70/2000h/P2	Capacitance 2.5μF/450VAC/70/2000h/P2	2
4.4	16427001000078	端子板 4 位/(600V 4mm2)123N(45 度双插片)	Terminal block 4	1
5	16321009000297	AFC-170HCLH3/BA6M 回风箱组件	Back to the bellows components	1
6	16430001000646	电机(三速) PG40B(85/170 风盘金属)	Motor PG 40B	1
7	16346001000001	离心风轮组件 150/175(铁壳电机φ12/ABS)	Centrifugal blower assembly	4
8	16321012000205	FPD-204WAYH3/6 蜗壳固定板组件(金属)	Volute fixed plate	1
9	16421005000599	AFC-170HCLH3/BA6M 顶盖板	Top cover inclined	1
10	16324012000282	FPD-204WAYH3/6 表冷器总成(三排宽片 1.4)	Heat exchanger assembly	1
11	16421001000690	FP-34WAYH3/6 左侧安装板	Left mounting plate	1
12	16421028000179	FP-170WAYH3/6 底盘	Baseplate	1
13	16421026000336	FP-170WAYH3/6 风口支撑板	Fan support stands	1

AFC-1400HCL/4BA6M spare part list

N0.	Material code	Chinese name	Part Name	Quantity
1	16432014000071	接水盘 FP-238WAYH3/6 242×1864 黑色	Wet pan 242×1864	1
2	16421001000691	FP-34WAYH3/6 右侧安装板	Right mounting plate	1
3	16421014000085	FP-34WAYH3/6 阀板	Valve plate	1
4	16322012000042	FP-34WAYH3/6 电控总成(通用)	Electronic components	1
4.1	16421005000582	FP-34WA 电器盒盖	Electric control box cover	1
4.2	16421005000581	FP-34WA 电器元件安装板	Electrical installation board	1
4.3	11330010000093	R 风机电容 4.0μF/450VAC/70/2000h/P2	Capacitance 4.0μF/450VAC/70/2000h/P2	2
4.4	16427001000078	端子板 4 位/(600V 4mm2)123N(45 度双插片)	Terminal block 4	1
5	16321009000300	AFC-238HCLH3/BA6M 回风箱组件	Back to the bellows components	1
6	16430001000648	电机(三速) PG70B(238 风盘金属)	Motor PG70B	2
7	16444005000144	离心风机组件 SYP-150/200J(左式)或（右式）	Centrifugal blower assembly	4
8	16421002000446	FPD-238WAYH3/6 蜗壳固定板(金属)	Volute fixed plate	1
9	16421005000601	AFC-238HCLH3/BA6M 顶盖板	Top cover inclined	1
10	16324012000225	FP-238WAZH3/6 表冷器总成(宽片 1.6)	Heat exchanger assembly	1
11	16421001000690	FP-34WAYH3/6 左侧安装板	Left mounting plate	1
12	16421028000181	FP-238WAYH3/6 底盘	Baseplate	1
13	16421026000336	FP-170WAYH3/6 风口支撑板	Fan support stands	1

AFC-1400HCR/4BA6M spare part list

N0.	Material code	Chinese name	Part Name	Quantity
1	16432014000071	接水盘 FP-238WAYH3/6 242×1864 黑色	Wet pan 242×1864	1
2	16421001000691	FP-34WAYH3/6 右侧安装板	Right mounting plate	1
3	16421014000085	FP-34WAYH3/6 阀板	Valve plate	1
4	16322012000042	FP-34WAYH3/6 电控总成(通用)	Electronic components	1
4.1	16421005000582	FP-34WA 电器盒盖	Electric control box cover	1
4.2	16421005000581	FP-34WA 电器元件安装板	Electrical installation board	1
4.3	11330010000093	R 风机电容 4.0μF/450VAC/70/2000h/P2	Capacitance 4.0μF/450VAC/70/2000h/P2	2
4.4	16427001000078	端子板 4 位/(600V 4mm2)123N(45 度双插片)	Terminal block 4	1
5	16321009000300	AFC-238HCLH3/BA6M 回风箱组件	Back to the bellows components	1
6	16430001000648	电机(三速) PG70B(238 风盘金属)	Motor PG70B	2
7	16444005000144	离心风机组件 SYP-150/200J(左式)或（右式）	Centrifugal blower assembly	4
8	16421002000446	FPD-238WAYH3/6 蜗壳固定板(金属)	Volute fixed plate	1
9	16421005000601	AFC-238HCLH3/BA6M 顶盖板	Top cover inclined	1
10	16324012000224	FP-238WAYH3/6 表冷器总成(宽片 1.6)	Heat exchanger assembly	1
11	16421001000690	FP-34WAYH3/6 左侧安装板	Left mounting plate	1
12	16421028000181	FP-238WAYH3/6 底盘	Baseplate	1
13	16421026000336	FP-170WAYH3/6 风口支撑板	Fan support stands	1

Part 3 Installation

1. Preparation before Installation 36

2. Unit installation 37

3. Electrical wiring 41

1. Preparation before Installation

◇Construction preparation

Material requirement and the main equipments:

a. The fan coil equipment should be applied with the ex-factory certification or the quality authentication file.

b. The structure, installation, outlet direction and the water inlet position of the fan coil equipment should accord with the design requirements.

c. The specifications and the models of the main and the accessorial materials applied for the equipment installation should accord with the design requirements and be with the ex-factory certification.

d. The following tools should be prepared:
Electrical hammer, electrical hand drill, screw spanner, box wrench, steel saw, pipe pliers, hand hammer, bench clamp, screw tap, level bar, sleeve, plummet, hand pump, pressure table, steam weld tools, etc.

◇Work condition:

a. The fan coil, the main and the accessorial materials should have arrived in the field, all the tools for installation have been prepared, and so are the site, water supply and power supply for the check before installation.

b. The architectural structure project is finished, the waterproof layer of the ceiling has been constructed, and meanwhile, the indoor wall and floor have been plastered.

c. The location and dimension for installation should accord with the design requirements, the main tube of the air conditioning system has been installed and the reserved pipe orifice location altitude of the branch tube connected with the fan coil should be in accordance with the demand.

◇Operation

a. Operation procedures:

Precheck → Construction preparation → Trial run for the motor checking → Surface cooler hydraulic pressure checking → hanger installation → Fan coil installation → Tubing →Check

b. Check each motor casing and the surface exchanger to see if there is any damage or rust before the fan coil installation.

c. Each fan coil should have the powered action test, and ensure there is no friction in the mechanical part, and no electric leakage in the electrical part.

d. Each fan coil should hydraulic pressure test, and the pressure in test should be 1.5 times that in normal run, with no leakage in 2 or 3 minutes after the pressure is fixed.

e. The hangers of the horizontal suspended fan coil should be installed levelly and firmly in the correct position. The suspender should not sway freely but be leveled, fastened with the double nuts and connected with the pallet.

f. The cooling or heating medium pipe should be connected with the steel pipe or the red copper pipe which should be kept straight. Clamp the hexagon junction as fastening the pipe in case of the damage to the copper pipe. It is better to connect the condensate pipe with the transparent hose whose length should be less than 300mm. Fasten the hose with hoop in case of the leakage, and keep the gradient accurate to ensure the condensate flowing to the desired place quickly and no water accumulated in the water pan.

g. The fan coil should be connected with the cooling or heating medium pipe after the duct system is purged, in case of the heat exchanger being blocked.

h. An active checking door should be kept in the hung ceiling for the horizontal buried fan coil in order to wholly dismantle and maintain the unit with convenience.

◇Quality standard

a. The installation of the fan coil should be firm and balanced.

Checking method: measurement with the level bar and the plummet

b. Well connection between the fan coil and the intake and drain pipes in case of the leakage, the gradient of the condensate tube should meet the requirements for drainage, and meanwhile, the connection between the air outlet and the return air chamber should be kept compact.

Checking method: measurement with ruler, observation and the test record checking.

c. Basic item

Well connection of the fan coil air opening without leakage.

Checking method: observation

◇ **Product protection**

a. The fan coil should be put in order and well kept with measures after transported to the field. The rain and snow prevention measures should be guaranteed.

b. The water should be drained completely immediately after the fan coil has the water pressure test in the winter construction in case of the equipment being frozen.

c. The fan coil should be installed with transportation, and well protected as the other work being conducted in case of being damaged.

◇ **The problems about its quality**

The general problems about its quality and the measures to avoid them

a. The surface exchanger is prone to be frozen in the winter construction, so the water should be drained completely to avoid that.

b. The fan coil is prone to be broken as transportation, so it needs to be loaded and unloaded carefully.

c. The baudelot cooler of the fan coil is prone to be blocked, so the fan coil and the duct installed can not be put into service without purging to avoid that.

d.The condensate pan of the fan coil is prone to be blocked, so it needs to be purged before the fan coil running to ensure the quick drainage of the condensate.

◇ **Record on the equality**

a. The project inspection and assessment table in items for the air treatment chamber producing and installation.

b. Records with the automatic inspection and reciprocal inspection

c. The record sheet on the project prechecking

d. The inspection record table for the equipments to enter the field.

2. Unit installation

2.1 Installation Notes

◇**The noise and the vibration should be considered**

a) The canvas joints should be mounted between the machine and the ducts for blast and return air, in case of the transmission of the noise and vibration from the indoor unit to the air tube, and then to the buildings.

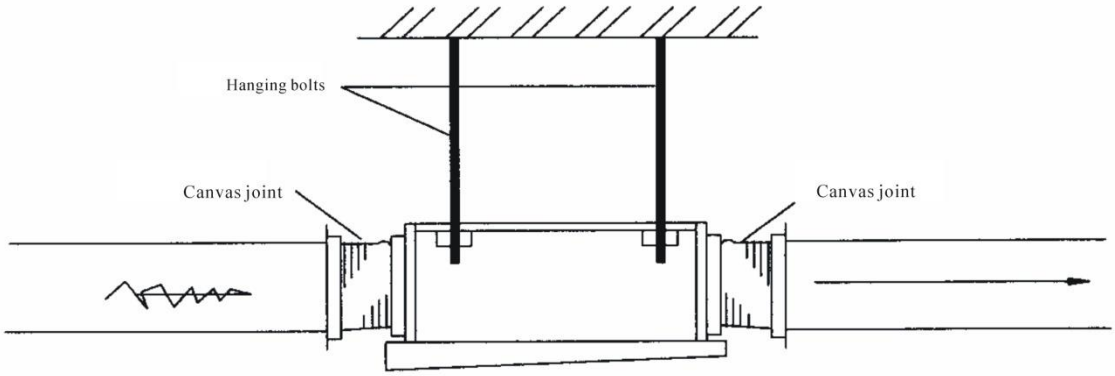

b) In order to minimize the noise, the speed of the airflow should be considered as selecting the tubes for blast and return air.

Notice:The low velocity duct is always adopted as the air tube for the air conditioner. It is the "constant pressure method" which specifies the friction loss as 0．1mmAq／m that is commonly used for the tube selection, and the size can be got with the "air tube ruler". The ratio between the length and the width of the rectangular air tube should be in the range of 1≤W/H44.

The wind speed at the gridiron blast inlet is 3m/s normally.
The wind speed at the gridiron return intake is 2．5m/s normally.
The wind speed at the new wind blind is 2．0m/s normally.

◇Keys points

a、Units must be installed by the professional person who is familiar with these products and understand the local relevant regulation.
b、When installation, forbidden carry fan impeller, volute to transport the unit
c、Unit hoisting should maintain firm, lifting point should be secured and requires enough strength to withstand a unit weight and runtime vibration , Unit needs to keep level, or it could cause condensation water overflowing
d、When duct interface and the exponential inlet interface is not fit, use the field compound variable cross-section duct to connect
e、When connect in-out water pipe, it is suggested that using the flexible nozzles and born tape sealing, torsion should not exceed 205.6 N.m (21Kgf.m), to avoid twisting crack and leaking
f、In-out water should be insulation, and adding the valve.
g、Cold water pump import need to install filters, to avoid dirty plugging heat exchanger
h、For fan-coil without air filter, please install filter in the return air inlet, to prevent dust jams coil finned heat exchanger, ensure exchanging effect
i、Before wire connection, please check the power supply voltage, frequency and phase whether it agree with the unit requirement, the power supply voltage deviation shall not exceed 10% of the rated voltage advisable
j、Strictly forbidden to use many sets of different type units share one control switch to control
k、The temp. of chilled water should be not less than 5℃ (to prevent condensation), hot water is not higher than 75℃(usually 60℃), and the water must be clean。

2.2 The reserved space for installation

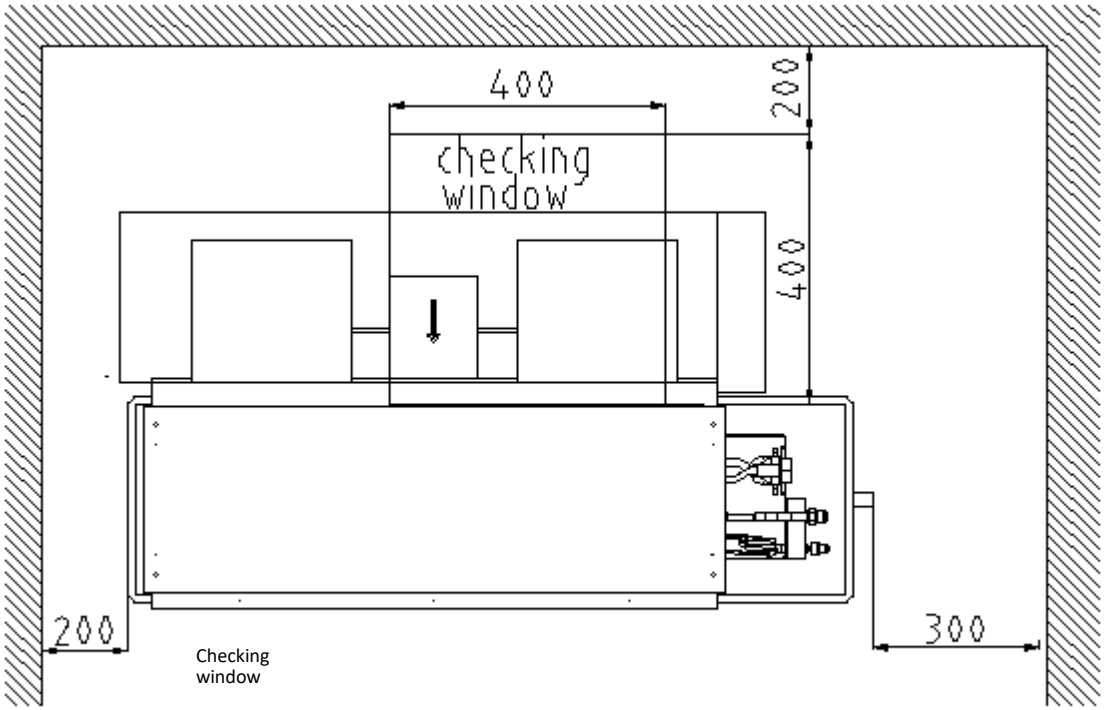

2.3 Unit suspension

◇Select the suspension foundation

The suspension foundation is a structure of either wooden frame or reinforced concrete. It must be firm and reliable to bear at least 4 times weight of itself and capable of bearing vibration for long periods;

◇Fixing of suspension foundation

Fix the suspension bolts either as shown in the picture or by a steel or wooden bracket;

◇Adjust the relative positions of the suspension hooks to ensure the indoor unit is level in all directions. Use a spirit level to ensure this, otherwise water leakage, air leakage etc. will be resulted;

◇Tighten the nuts and ensure that the hooks are tightly connected to the nuts and shims, and there is no phenomenon of virtual hanging;

◇After the unit is installed ensure it is secure and does not shake or sway.

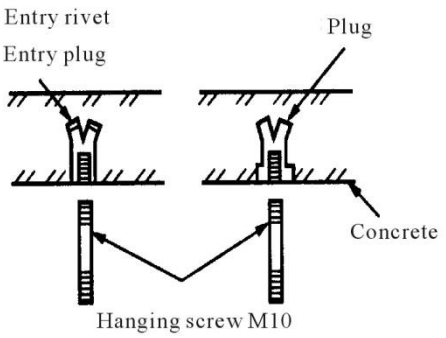

◇unit installation

1. Ascertain the route of the unit transit to the site for installation
2. Do not unpack the machine before arriving at the installation site. Lift the unit with a soft rope or a protective board with rope, in case of the damage to the unit or its scrape.
3. Fix the indoor unit with the hanging screws.

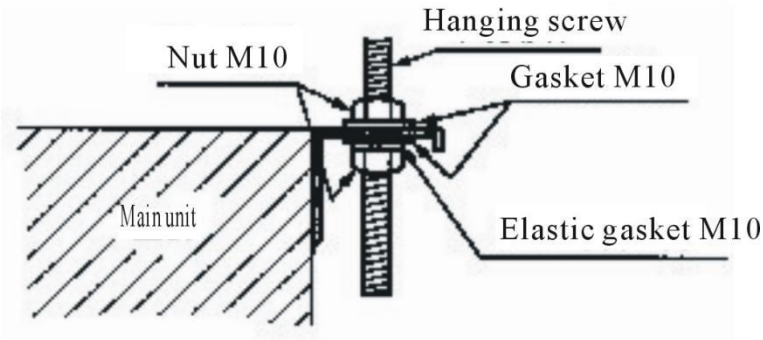

2.4 Duct pipeline installation

◇Using canvas to connect between indoor unit and duct pipeline, in order to save unnecessary vibration, as to the detail connection method please refer to the following picture；

◇Two pipeline installation methods: back air return ,below air return, connecting method as follows:

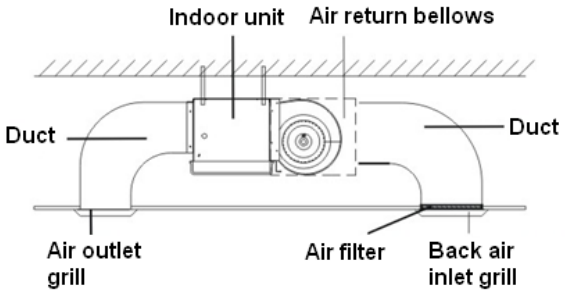

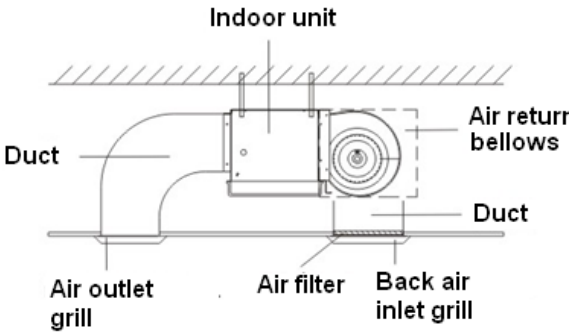

◇Installation of Canvas and grille

a、Use the canvas which is together with the unit to press the edgings, fix the air outlet canvas on the air outlet and fix the return air canvas on the air inlet

b、 Use canvas to connect indoor unit, air outlet grille and air inlet grille, see pic of connecting methods as follows:

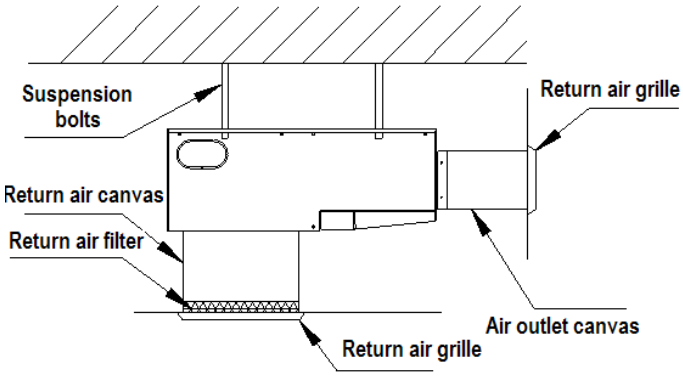

2.5 Drainage pipe installation

◇Drainage pipes must be wrapped with heat insulation materials, otherwise it will cause frost or droplets, see picture as follows:

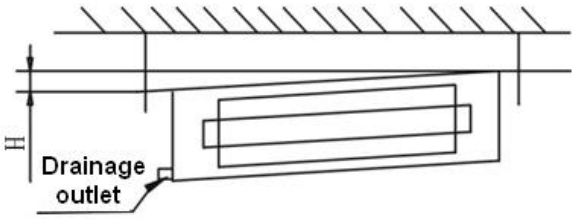

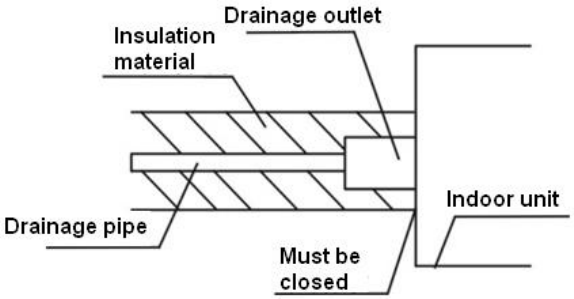

Heat insulation material: rubber insulation pipe with the thickness of more than 8mm

◇Drainage pipe must have a downward gradient H=C*(1 / 50 1 / 100).If the drain pipe is installed ups and downs, it will cause water backflow or leakage etc.

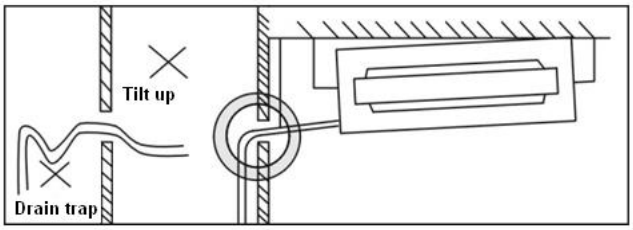

◇When finish installation please carry out the drainage test to ensure that the water flow through the pipeline fluently, and carefully observe the junction to ensure that there is no water leakage at the junction. If the unit is installed in the newly built house, strongly recommend that this test taken before the ceiling installation. Even it is the heating only unit, this test is unavoidable.

3. Electrical wiring

3.1 Electrical wiring precautions

◇The zero line must be connect with a designated neutral joints， or the motor will be burnt

◇Please refer to packaged installation instruction to install the thermostat

◇Please don't use a thermostat to control many sets of different types of fan coil units, otherwise might burn motor

◇Please follow the instructions request of the circuit diagram to connect the power line。

◇Use cable fixed device to connected wires with terminals block securely ,to prevent external force in the wires to make dangerous

◇After connecting the wire, in case of collision with other part, binding each wire with belt

3.2 Electric wiring

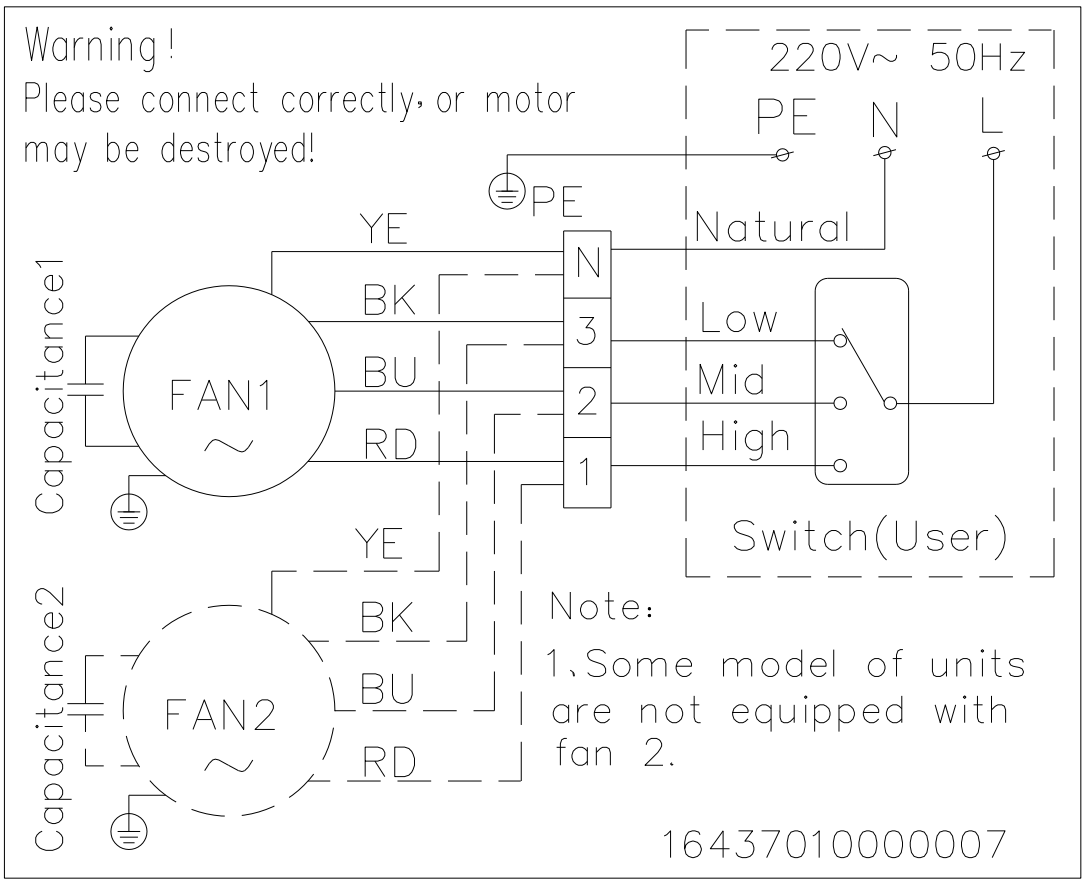

3.2.1 Unit control mode

◇Unit control using local control method

There are three subassemblies available besides the standard unit connecting box for the fan coil unit.

A,Refrigerating-stop-heating, three-speed mode

heating-stop-refrigerating automatic thermo-regulator and a three-speed controller are included with an electromagnetic valve with 3/4” female screw joint and an actuator.

B,Automatic temperature regulation with three-speed control mode

An automatic thermo-regulator with the increment PI control and a three-speed switch are included with an electromagnetic valve with 3/4” female screw joint and an increment actuator.

C,Automatic temperature regulation and three-speed control with the digital temperature display mode A proportional PI controlling automatic thermo-regulator and a three-speed switch are included with an electromagnetic valve with 3/4” female screw joint and an increment actuator.

3.2.2 Electrical connection

Complete unit internal connection is included in the fan coil unit. The terminals are located in a metal connection box and the connection block is composed of 4 terminals which are labeled 1-2-3-N, them applied to connect the three-speed switch “Zero wire, high speed, medium speed, low speed”. Read the connection diagram on the electrical control box of the unit carefully and ensure it is conducted by the professionals.
Notice: the zero wire of the power should be connected at the specified position in case of the burn to the motor.
The thermo-regulator installation should follow the installation guide in the AUX thermo-regulator packaging.
Notice: Avoid multi fan coil units with different models being controlled by one thermo-regulator in case of the burn to the motor.

Part 4 Commissioning

1. Prepare for commissioning 44

2. System testing and adding water 44

3. Installation notes 44

4. Daily maintenance 44

1. Prepare for commissioning

a. Clean out the unrelated stuff in the water pan, fan casing and around the fan coil, and check the installation locations of the water tubes, wires, etc, before the first run.
b. Close the equipment's valves for the water in and out, and reopen them after the condensate duct system is purged, before the first run.
c. Open the venting valve of the return water tube to discharge the air in the coil and tubing completely, before the first run.

2. System testing and adding water

●Before conducting pressure test of fan coil air conditioner system, it's necessary to formulate pressure test scheme and select appropriate pressure test pump. During pressure test, it's necessary to carefully record press teat status timely monitor pressure change of system.
● Pay attention to the following points when formulating pressure test scheme:
① Before filling water for coil, vent valve on collecting head must be opened and then closed until exhausting the air in coil.
② Pressure test should be conducted under air temperature conditions above 5℃, otherwise, anti-freezing measures should be taken.
③ During hydraulic test, increase pressure slowly and evenly. Carefully check if there is water leakage at the joint after water pump stops running and hydraulic pressure stabilizes. Don't repair in case of hydraulic pressure.
④ As for water filling in the system, it's mandatory to fill water by layer, discharge by layer and test layer by layer.
⑤ After confirming there is no leakage on pipeline of system, finally conduct thermal insulation treatment according to design scheme.
● Pressure test scheme of system should be formulated according to the principle of water-flowing from low to high and injecting water layer by layer. Moreover, the above points must be followed, otherwise, structural damage may be caused to fan coil unit and system pipeline.
Fan coil units operating limit：

Max. inlet water temperature …… 75℃
Max. operating pressure …… 1.6MPa
Power…… 220-240V~/50Hz（±10%）

3. Installation notes

◇Season changing or do not use for more than 2 months, before initial operation, clear foreign matters in drip tray, fan shell and around coil, and check if installation points such as water pipe and electric wire are correct;
◇Season changing or do not use for more than 2 months, before initial operation, first shut down inlet and outlet water valves of equipment, then open inlet and outlet water valves of equipment after cleaning pipeline system of chiller water;
◇Season changing or do not use for more than 2 months, before initial operation, open vent valve on water outlet pipe to exhaust air in coil and pipeline.

4. Daily maintenance

4.1 Clean air filter

4.1. 1 Filter cleaning precaution

◇Before cleaning the filter, ensure the unit is switched off and the power is off；
◇Forbidden to use water clean the filter , it will hurt PCB or get an electric shock；
◇When cleaning filter net, be sure you are standing steady, if you use ladder or others, please be careful.

4.1.2 Washing filter net

◇ Use vacuum or water to clean the net；
◇In order to ensure the best performance from your air conditioner clean the air filter regularly We recommend cleaning once a month or more frequently if required.
◇When the filter is very dirty it can be washed in detergent and hot water (below 45oC)；

◇Ensure the filter is fully dry before reinstallation to avoid risk of electric shock or short circuiting；
◇Do not dry the filter using direct sunlight；

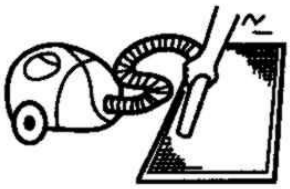

4.2 Daily maintenance of the unit

◇The coil of the unit should be cleaned termly to keep the coil clean
◇The return air filter should be cleaned frequently in case of that the filter jam may lead to the fall of the unit refrigerating and heating efficiency;
◇Clean the water filter every week in the initial unit running period, and clean once per one or two months a month later.；
◇The power connection should be checked aperiodically, in case of the damage to the equipment, the loose of the connection and even the fire.

4.3 Check at the beginning of each season

◇Check whether there are no physical obstructions at the air inlet or outlet of either indoor or outdoor unit；
◇Check whether there are some garbage at the water outlet；
◇Check whether electrical cables are in good condition, particularly the earth cable；

4.4 Check at the end of service season

◇If not use air conditioner in a long time, please close the power to save energy。
◇During the seasons that unit without running, full filling water in the pipe in summer to against corrosion and drain off the water in winter to against freezing. and cracking.

Part 5 Trouble shooting

1. Unit main components 47

2. Analysis and Solution of Failure 51

3. Air conditioner cooling load estimate index..... 57

1. Unit main components

1.1 AFC-200HCL/4BA6M Spare parts list

AFC-200HCL/4BA6M				
No	Description	Qty	Unit	Remark
16444005000144	Centrifugal blower assembly	1	pcs	
16430001000643	Motor PG13B	1	pcs	
11330010000088	Capacitance 1.5μF/450VAC/70/2000h/P2	1	pcs	**30Pa** unit
16427001000078	Terminal block 4	1	pcs	
16324012000233	FP-34WAZH3/6 evaporator assembly	1	pcs	

1.2 AFC-200HCR/4BA6M Spare parts list

AFC-200HCR/4BA6M				
No	Description	Qty	Unit	Remark
16444005000144	Centrifugal blower assembly	1	pcs	
16430001000643	Motor PG13B	1	pcs	
11330010000088	Capacitance 1.5μF/450VAC/70/2000h/P2	1	pcs	**30Pa** unit
16427001000078	Terminal block 4	1	pcs	
16324012000216	FP-34WAYH3/6 evaporator assembly	1	pcs	

1.3 AFC-300HCL/4BA6M Spare parts list

AFC-300HCL/4BA6M				
No	Description	Qty	Unit	Remark
16444005000144	Centrifugal blower assembly	2	pcs	
16430001000644	Motor PG20B	1	pcs	
11330010000089	Capacitance 2.0μF/450VAC/70/2000h/P2	1	pcs	**30Pa**Unit
16427001000078	Terminal block 4	1	pcs	
16324012000232	FP-51WAZH3/6 heat exchanger assembly	1	pcs	

1.4 AFC-300HCR/4BA6M Spare parts list

AFC-300HCR/4BA6M				
No	Description	Qty	Unit	Remark
16444005000144	Centrifugal blower assembly	2	pcs	
16430001000644	Motor PG20B	1	pcs	
11330010000089	Capacitance 2.0μF/450VAC/70/2000h/P2	1	pcs	**30Pa**Unit
16427001000078	Terminal block 4	1	pcs	
16324012000217	FP-51WAYH3/6 heat exchanger assembly	1	pcs	

1.5 AFC-400HCL/4BA6M Spare parts list

AFC-400HCL/4BA6M				
No	Description	Qty	Unit	Remark
16444005000144	Centrifugal blower assembly	2	pcs	
16430001000645	Motor PG30B	1	pcs	
11330010000089	Capacitance 2.0μF/450VAC/70/2000h/P2	1	pcs	**30Pa**Unit

16427001000078	Terminal block 4	1	pcs	
16324012000231	FP-68WAZH3/6 evaporator assembly	1	pcs	

1.6 AFC-400HCR/4BA6M Spare parts list

AFC-400HCR/4BA6M				
No	Description	Qty	Unit	Remark
16444005000144	Centrifugal blower assembly	2	pcs	
16430001000645	Motor PG30B	1	pcs	
11330010000089	Capacitance 2.0μF/450VAC/70/2000h/P2	1	pcs	**30Pa**Unit
16427001000078	Terminal block 4	1	pcs	
16324012000218	FP-68WAYH3/6 evaporator assembly	1	pcs	

1.7 AFC-500HCL/4BA6M Spare parts list

AFC-500HCL/4BA6M				
No	Description	Qty	Unit	Remark
16444005000144	Centrifugal blower assembly	2	pcs	
16430001000646	Motor PG40B	1	pcs	
11330010000090	Capacitance 2.5μF/450VAC/70/2000h/P2	1	pcs	**30Pa**Unit
16427001000078	Terminal block 4	1	pcs	
16324012000230	FP-85WAZH3/6 evaporator assembly	1	pcs	

1.8 AFC-500HCR/4BA6M Spare parts list

AFC-500HCR/4BA6M				
No	Description	Qty	Unit	Remark
16444005000144	Centrifugal blower assembly	2	pcs	
16430001000646	Motor PG40B	1	pcs	
11330010000090	Capacitance 2.5μF/450VAC/70/2000h/P2	1	pcs	**30Pa**Unit
16427001000078	Terminal block 4	1	pcs	
16324012000219	FP-85WAYH3/6 evaporator assembly	1	pcs	

1.9 AFC-600HCL/4BA6M Spare parts list

AFC-600HCL/4BA6M				
No	Description	Qty	Unit	Remark
16444005000144	Centrifugal blower assembly	2	pcs	
16430001000647	Motor PG55B	1	pcs	
11330010000091	Capacitance 3.0μF/450VAC/70/2000h/P2	1	pcs	**30Pa**Unit
16427001000078	Terminal block 4	1	pcs	
16324012000229	FP-102WAZH3/6 heat exchanger assembly	1	pcs	

1.10 AFC-600HCR/4BA6M Spare parts list

AFC-600HCR/4BA6M				
No	Description	Qty	Unit	Remark
16444005000144	Centrifugal blower assembly	2	pcs	
16430001000647	Motor PG55B	1	pcs	
11330010000091	Capacitance 3.0μF/450VAC/70/2000h/P2	1	pcs	**30Pa**Unit

16427001000078	Terminal block 4	1	pcs	
16324012000220	FP-102WAYH3/6 heat exchanger assembly	1	pcs	

1.11 AFC-800HCL/4BA6M Spare parts list

AFC-800HCL/4BA6M				
No	Description	Qty	Unit	Remark
16444005000144	Centrifugal blower assembly	3	pcs	
16430001000643	Motor PG13B	1	pcs	
16430001000647	Motor PG55B	1		
11330010000089	Capacitance 2.0μF/450VAC/70/2000h/P2	1	pcs	**30Pa**Unit
11330010000091	Capacitance 3.0μF/450VAC/70/2000h/P2	1	pcs	**30Pa**Unit
16427001000078	Terminal block 4	1	pcs	
16324012000228	FP-136WAZH3/6 evaporator assembly	1	pcs	

1.12 AFC-800HCR/4BA6M Spare parts list

AFC-800HCR/4BA6M				
No	Description	Qty	Unit	Remark
16444005000144	Centrifugal blower assembly	3	pcs	
16430001000643	Motor PG13B	1	pcs	
16430001000647	Motor PG55B	1		
11330010000089	Capacitance 2.0μF/450VAC/70/2000h/P2	1	pcs	**30Pa**Unit
11330010000091	Capacitance 3.0μF/450VAC/70/2000h/P2	1	pcs	**30Pa**Unit
16427001000078	Terminal block 4	1	pcs	
16324012000228	FP-136WAZH3/6 evaporator assembly	1	pcs	

1.13 AFC-1000HCL/4BA6M Spare parts list

AFC-1000HCL/4BA6M				
No	Description	Qty	Unit	Remark
16444005000144	Centrifugal blower assembly	4	pcs	
16430001000646	Motor PG 40B	2	pcs	
11330010000090	Capacitance 2.5μF/450VAC/70/2000h/P2	2	pcs	**30Pa**Unit
16427001000078	Terminal block 4	1	pcs	
16324012000227	FP-170WAZH3/6 evaporator assembly	1	pcs	

1.14 AFC-1000HCR/4BA6M Spare parts list

AFC-1000HCR/4BA6M				
No	Description	Qty	Unit	Remark
16444005000144	Centrifugal blower assembly	4	pcs	
16430001000646	Motor PG 40B	2	pcs	
11330010000090	Capacitance 2.5μF/450VAC/70/2000h/P2	2	pcs	**30Pa**Unit
16427001000078	Terminal block 4	1	pcs	
16324012000222	FP-170WAYH3/6 evaporator assembly	1	pcs	

1.15 AFC-1200HCL/4BA6M Spare parts list

AFC-1200HCL/4BA6M				
No	Description	Qty	Unit	Remark
16444005000144	Centrifugal blower assembly	4	pcs	
16430001000646	Motor PG 40B	2	pcs	
11330010000090	Capacitance 2.5μF/450VAC/70/2000h/P2	2	pcs	**30Pa**Unit
16427001000078	Terminal block 4	1	pcs	
16324012000226	FP-204WAZH3/6 evaporator assembly	1	pcs	

1.16 AFC-1200HCR/4BA6M Spare parts list

AFC-1200HCR/4BA6M				
No	Description	Qty	Unit	Remark
16444005000144	Centrifugal blower assembly	4	pcs	
16430001000646	Motor PG 40B	2	pcs	
11330010000090	Capacitance 2.5μF/450VAC/70/2000h/P2	2	pcs	**30Pa**Unit
16427001000078	Terminal block 4	1	pcs	
16324012000223	FP-204WAYH3/6 evaporator assembly	1	pcs	

1.17 AFC-1400HCL/4BA6M Spare parts list

AFC-1400HCL/4BA6M				
No	Description	Qty	Unit	Remark
16444005000144	Centrifugal blower assembly	4	pcs	
16430001000648	Motor PG70B	2	pcs	
11330010000093	Capacitance 4.0μF/450VAC/70/2000h/P2	2	pcs	**30Pa**Unit
16427001000078	Terminal block 4	1	pcs	
16324012000225	FP-238WAZH3/6 evaporator assembly	1	pcs	

1.18 AFC-1400HCR/4BA6M Spare parts list

AFC-1400HCR/4BA6M				
No	Description	Qty	Unit	Remark
16444005000144	Centrifugal blower assembly	4	pcs	
16430001000648	Motor PG70B	2	pcs	
11330010000093	Capacitance 4.0μF/450VAC/70/2000h/P2	2	pcs	**30Pa**Unit
16427001000078	Terminal block 4	1	pcs	
16324012000224	FP-238WAYH3/6 evaporator assembly	1	pcs	

2. Analysis and Solution of Failure

2.1 Fan stops working

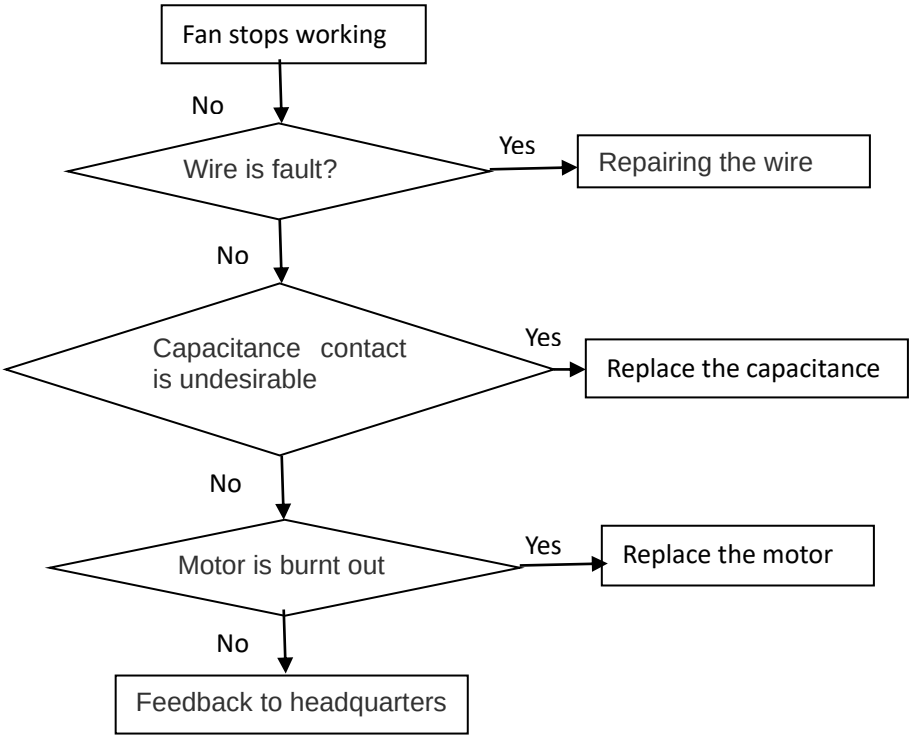

2.2 Cooling or heating effect is poor

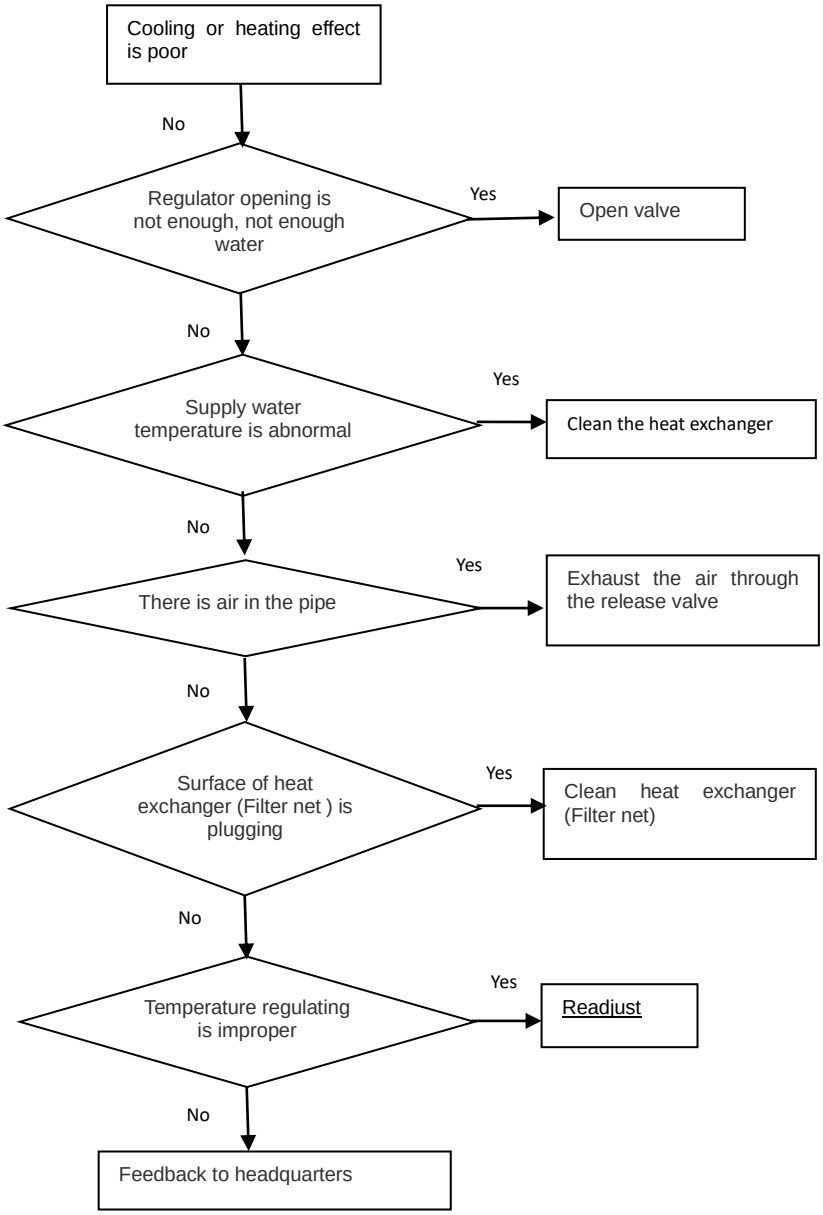

2.3 Unit abnormal noise or vibration

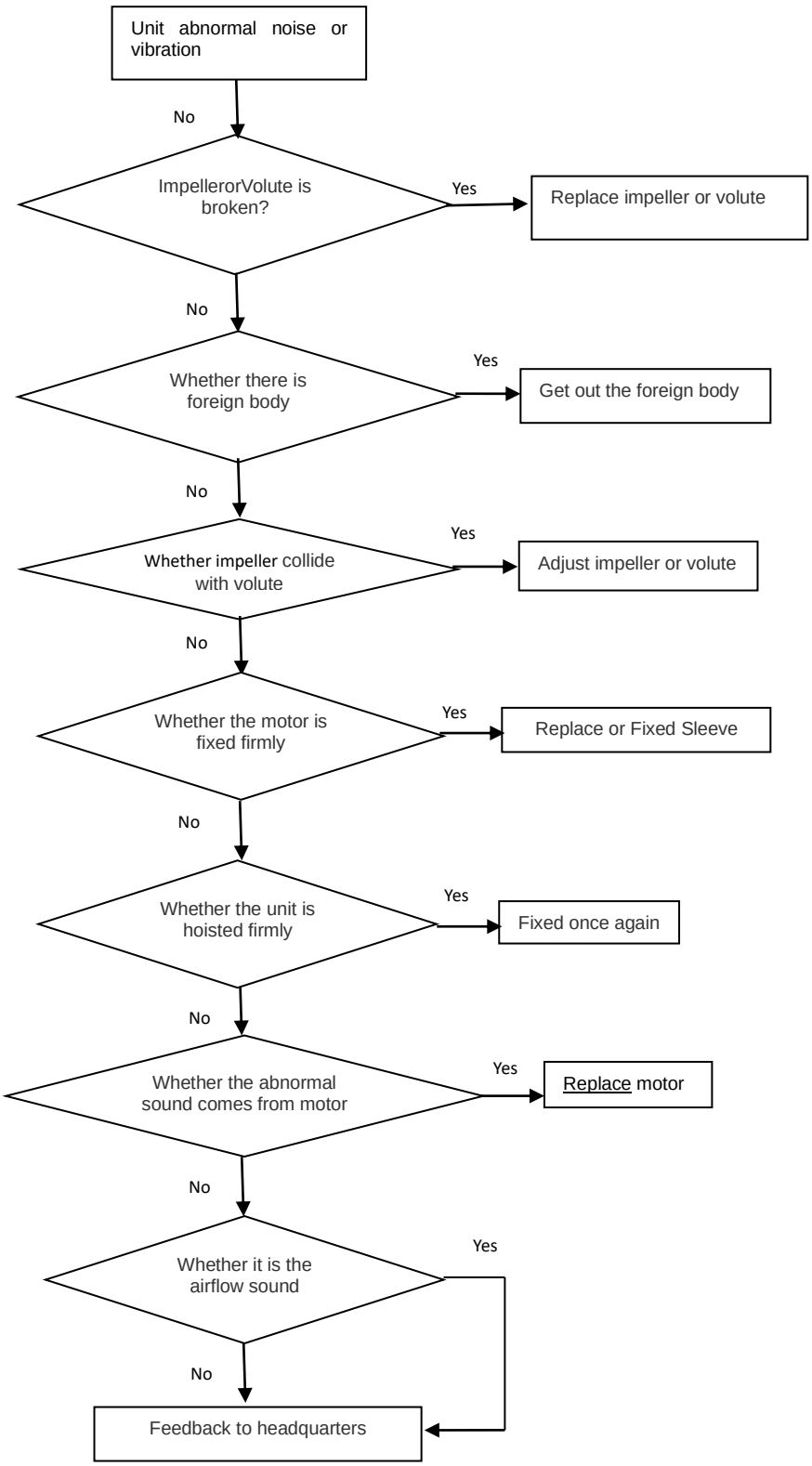

2.4 Unit water leakage.

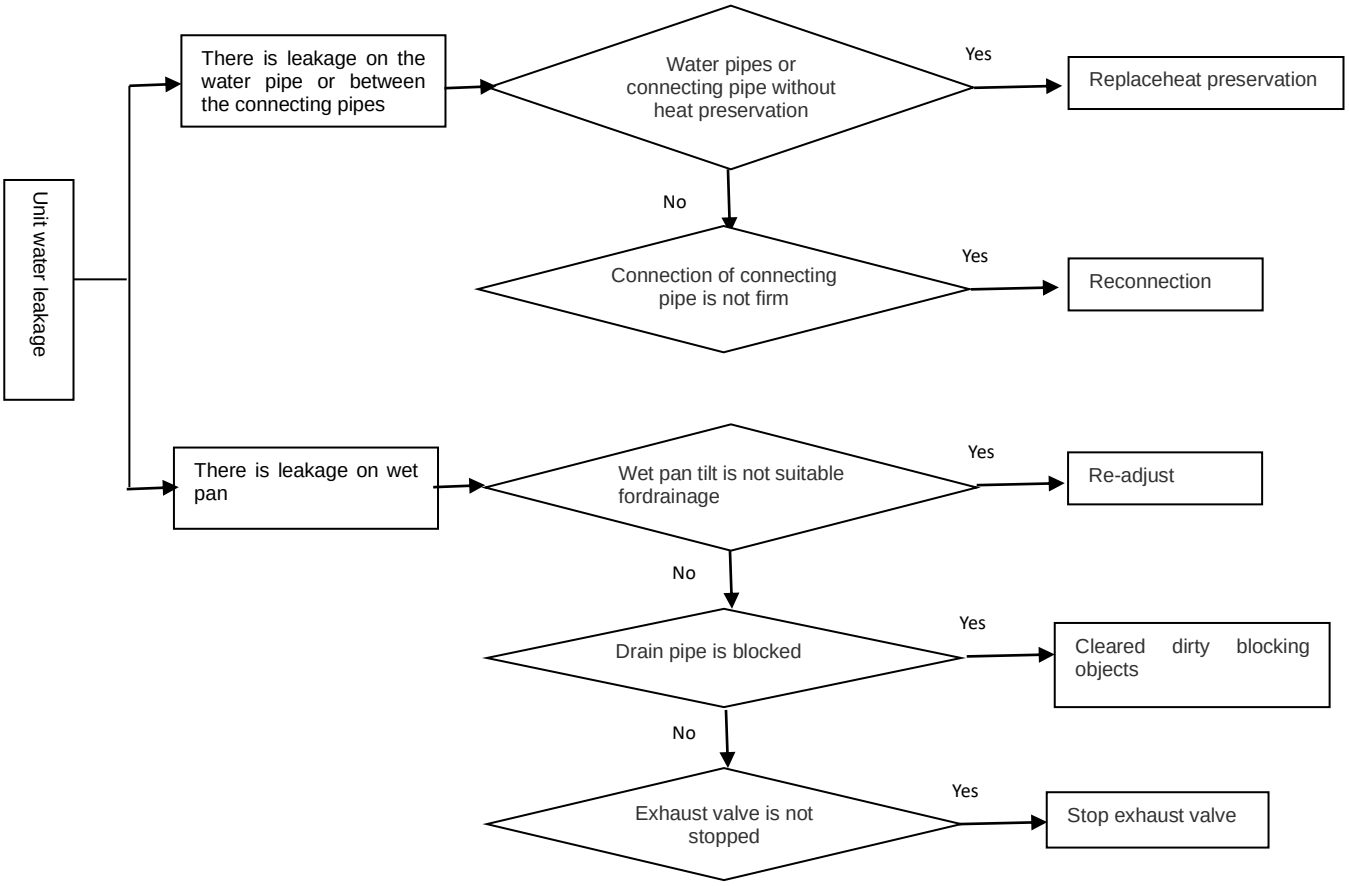

2.5 There is unusual smell blown out from the unit

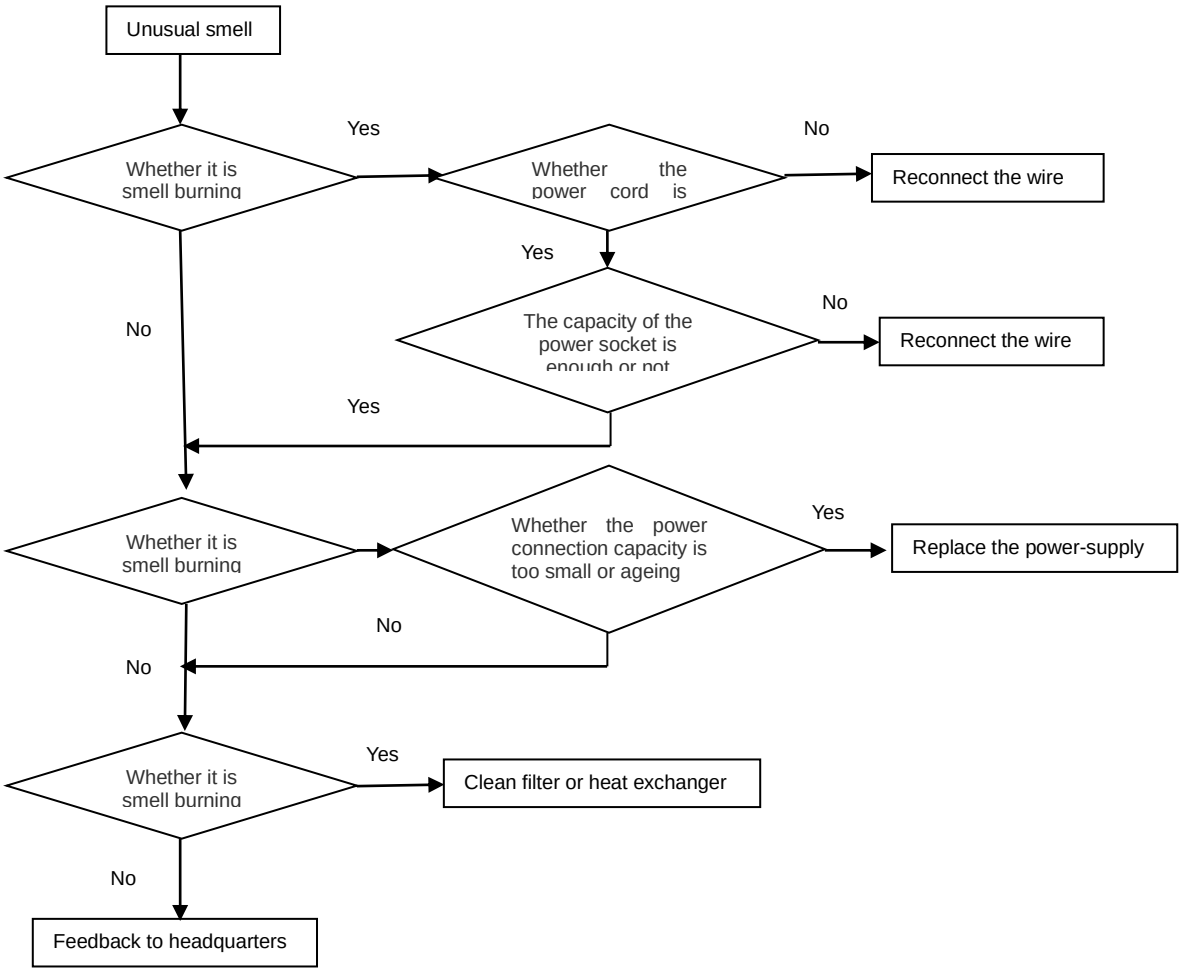

2.6 Phenomenon of Non-Air Conditioner Failure

2.6.1 Poor cooling or heating effect

Some phenomena in using process are similar to failures, which are not failures in fact. Therefore, when cooling effect isn't satisfactory, eliminate the following factors first:

Phenomenon	Reason description
Ambient temp. is high, indoor personnel is more, the unit works at full load, air blow out from the air outlet is cold, but the room temperature can't go down, this is not failure.	When ambient temp. is higher, external heat increase the unit cooling load; if there many person in the room (if there are 10 people), while each people with 120W heat or so, total heat for 10pcs people is 1200W, should use off half of unit cold capacity, then cold capacity of the unit is insufficient, room temperature can't come down, this is normal phenomenon, cannot say it is failure.
When the unit is set at high fan speed, room temperature can't cool down and there is less airflow at air outlet.	Filth blockage of air filter makes cooling capacity can't be taken out by flowing air timely, causing insufficient cooling capacity that can be solved by removing and cleaning filtering net.
When the unit is set at high fan speed, unit vibrates greatly and brings loud noise.	It's normal that unit vibrates greatly and brings loud noise when fan runs at maximum speed.
Uneven or poor cooling effect can also be caused by improper installation position of air conditioner.	Readjust installation position of air conditioner.

2.6.2 Non fault phenomena

phenomena	Reason description
The fog blows out from unit	When cold airstream of the unit cool the indoor air, it can cause this kind of phenomenon
Sometimes there is peculiar smell in the room	Unit itself does not have peculiar smell, if have peculiar smell, because the environment of peculiar smell accumulation formation Solution: clean air filters

3. Air conditioner cooling load estimate index

No	Roomtype	Indoor People No (Person/m²)	Construction Load (W/m²)	Body Load (W/m²)	Lighting load (W/m²)	Fresh air (m³/ Person.h)	Fresh air load (W/m²)	Total load (W/m²)/(Kcal/m²)
1	Apartment	0.10	70.00	14.00	20.00	50.00	54.00	158.00/135.88
2	Bedroom	0.25	50.00	41.00	50.00	25.00	67.00	208.00/178.88
3	Ordinary rooms	0.10	50.00	14.00	20.00	25.00	36.00	145.00/124.70
4	Guest Room	0.06	60.00	7.00	20.00	50.00	40.00	177.00/152.22
5	Dining room / sitting room	0.50	35.00	70.00	20.00	25.00	40.00	190.00/163.40
6	The bar	0.50	35.00	70.00	15.00	25.00	136.00	256.00/220.16
7	Coffee shop	0.50	35.00	70.00	15.00	25.00	136.00	256.00/220.16
8	Canteen	0.20	40.00	31.00	40.00	20.00	50.00	181.00/156.66
9	sHOP	0.20	40.00	31.00	40.00	20.00	50.00	181.00/156.66
10	Small private office	0.10	40.00	14.00	50.00	25.00	40.00	145.00/124.70
11	General office	0.20	40.00	28.00	40.00	25.00	45.00	178.00/148.78
12	Reading room	0.20	50.00	28.00	30.00	25.00	60.00	193.00/166.00
13	Meeting room	0.64	60.00	89.00	40.00	25.00	136.00	350.00/301.00
14	Shopping centre	1.00	35.00	140.00	40.00	12.00	136.00	347.00/298.00