AUX
COMMERCIAL AIR CONDITIONER

2024

Technical & Service Manual

Fan coil unit

Wall-mounted Q series

Technology Leads Intelligent Life

Version 1（2024.05）

Content

Content 1
1. Nomenclatures 2
2.Product Line 3
3. Features 3
4. Dimension 5
5. Exploded view 7
6. Sound level 11
7. Capacity amendment 15
8. Product selection 19
9. Wiring diagram 21
10. PCB Port Introduction 22
11. Split controller 23
12. Main functions 28
13. Installation 36
14. Trouble shooting 39
Update record 49

1. Nomenclatures

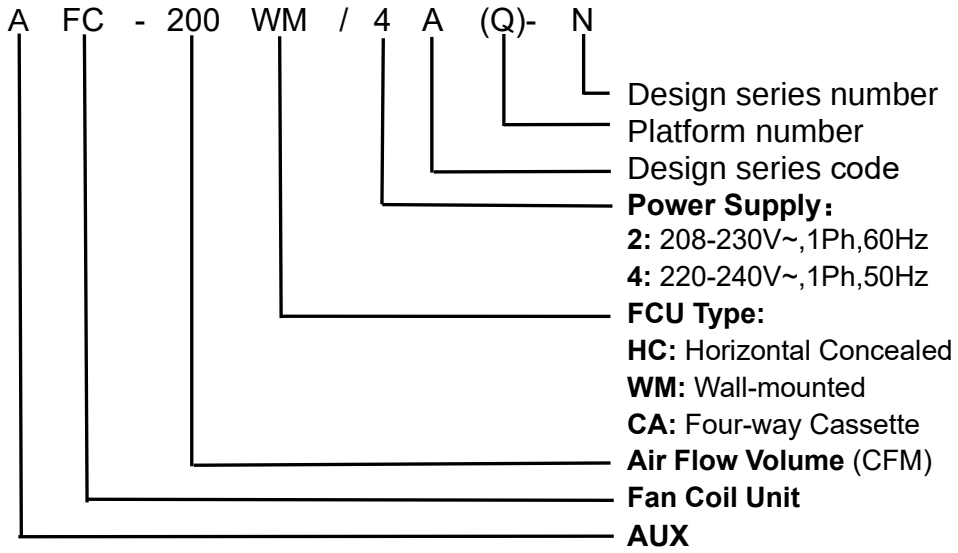

2.Product Line

Series	Models	Photos
50HZ Q Series	AFC-200WM/4A(Q*)-N	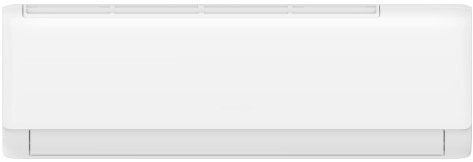
	AFC-300WM/4A(Q*)-N	
	AFC-400WM/4A(Q*)-N	
	AFC-500WM/4A(Q*)-N	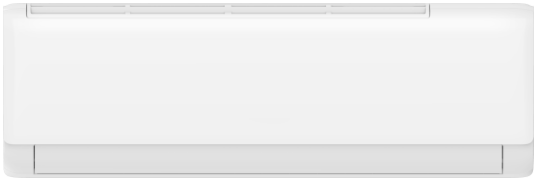
	AFC-600WM/4A(Q*)-N	

3. Features

The fan coil units mainly consist of centrifugal fan, coil heat exchanger, etc., they are the terminal devices of central air conditioning system, which are widely used in buildings with multi-rooms or industrial and household air conditioning occasions, for example: hotels, restaurants, factories, hospitals, exhibition halls, markets and office buildings, etc. These units can meet many requirements, like cooling, dehumidification and heating, etc., and make a clean, quiet and comfortable working and living environment.

Compared with other types of fan coil units, the wall-mounted type has the following advantages: it can be mounted on any location of indoor wall and will not occupy extra space; it's easy for installation and maintenance, and can perfectly match with indoor decoration. The wall-mounted type fan coil units:

Application occasions:

Small-size supermarkets, restaurants, office buildings, meeting rooms, villa living rooms and family living rooms, etc., and it is also suitable for old building air conditioning betterment projects, which decreases pipes and saves much cost.

Features:

◇WIFI function: The Q series FCU is already equipped with WIFI function as standard
◇Fire alarm-window opening linkage function: When the window is opened or a fire occurs, the FCU will automatically shuts down;
◇Built in three-way valve: No need for additional water valves, saving time and space for installation;
◇Built in MODBUS and Centralized control gateway: The Q series FCU already has a built-in MODBUS gateway, so it is Very convenient to connect to the BMS system
◇It can be mounted on any location of indoor wall and will not occupy extra space, which makes it very suitable for family and public places use;
◇Excellent quality: The units adopt superb components to ensure its quality. The strict test during manufacturing process and 100% ex-factory test guarantees the reliable quality;
◇Beautiful appearance and low noise: Resin type skin with thin and beautiful appearance; new turbine blade makes operation quiet and with low noise;
◇Special heat isolation design, excellent heat isolation effect, and the casing will not get condensing water;
◇Long-term air filter adopted, its cleaning period is 1/2 of the normal filter, which make maintenance easier;
◇Plastic drip tray, adopts innovative foam-PS combination technology, the plastic surface thickness reaches 1mm. These features make the drip tray structure firmer and also avoid leakage;
◇The unit reserve central control function, which can combine several independent units into a central-controlled system by concentrator;
◇Safe and reliable, long-term lifetime: Each fan coil unit is conducted by leakage test with pressure; The inlet and outlet pipes are made of stainless steel;
◇High EER: The unit design is customized and adopts high efficiency heat exchanger, which makes a perfect combination of large air flow volume, low noise fan and motor, in order to enhance heat transfer ability and make the unit EER more superior;
◇The unit reserve auto-restart function;
◇The unit adopts brand new diversified micro-pc control system, and with remote controller;
◇The unit is equipped with failure auto-check function. If it gets failure, the light will blink and failure code will display on the wired controller, which makes troubleshooting easier.

4. Dimension

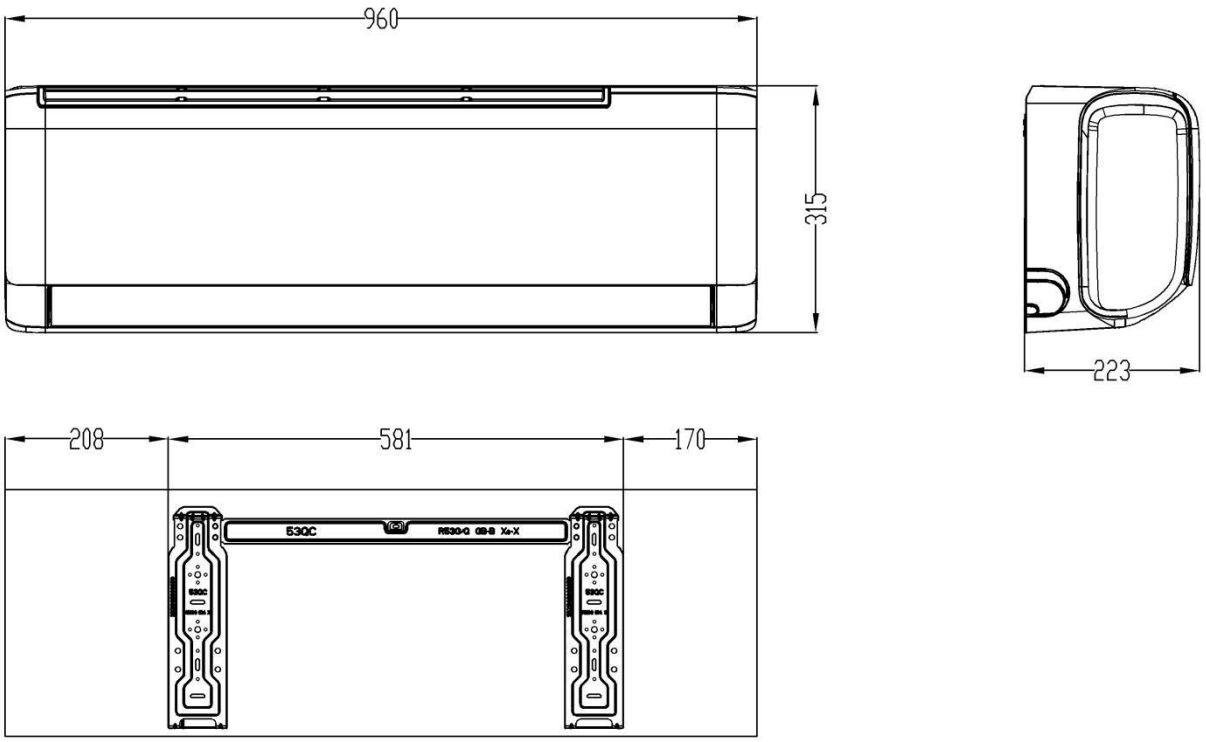

Physical Dimension		AFC-200WM/4A(Q*)-N AFC-300WM/4A(Q*)-N AFC-400WM/4A(Q*)-N
Length	**mm**	960
Height	**mm**	315
Width	**mm**	223

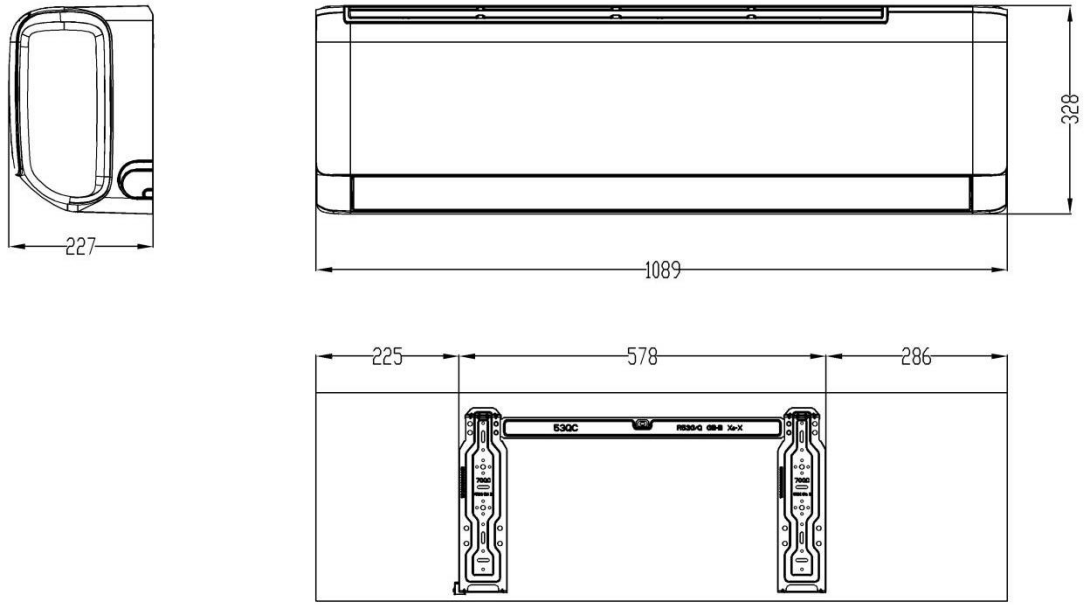

Physical Dimension		AFC-500WM/4A(Q*)-N AFC-600WM/4A(Q*)-N
Length	**mm**	1089
Height	**mm**	328
Width	**mm**	227

5. Exploded view

5.1 AFC-200WM/4A(Q*)-N、AFC-300WM/4A(Q*)-N、AFC-400WM/4A(Q*)-N

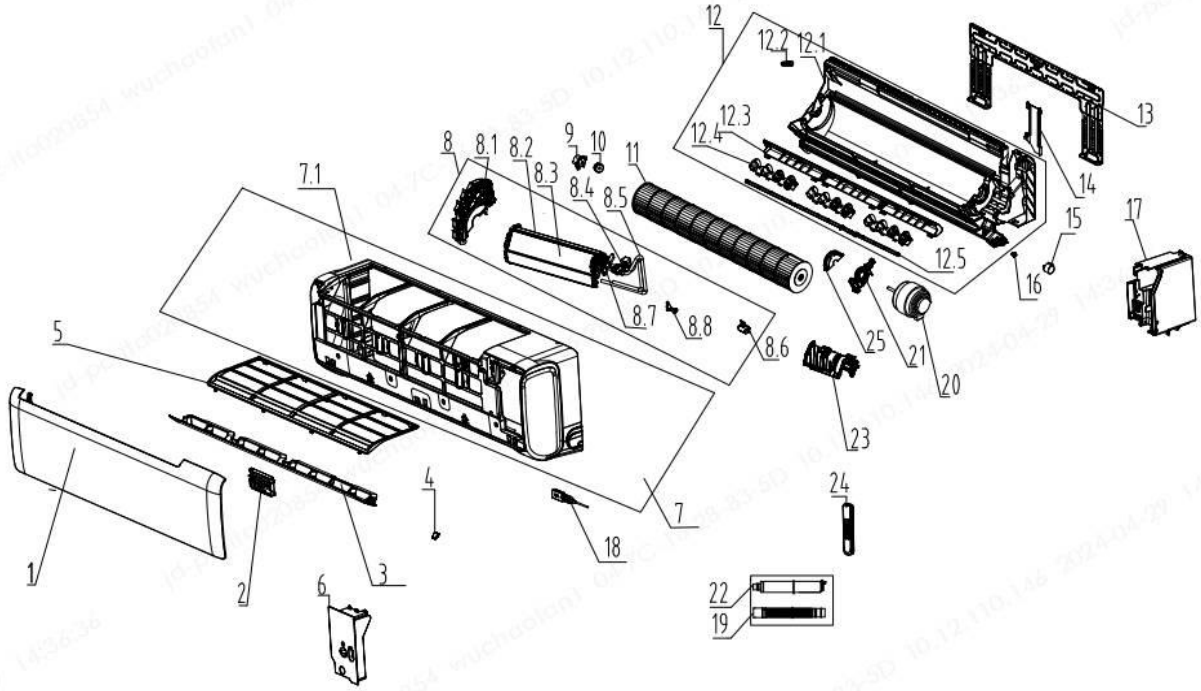

No.	Part Name	Quantity	BOM Code
1	Panel	1	11320003003715
2	Display board	1	11222014000804
3	Air louver（Horizontal）	1	11320005000470
4	Screw cover	2	11320096000104
5	Filter	1	11220508000200
6	Medium frame wiring cover	1	11320076000136
7	Medium frame assembly	1	11220501001009
7.1	Medium frame	1	11320002000421
8	Evaporator assembly	1	16324018000149
8.1	Evaporator left side carriage	1	11320015000122
8.2	Evaporator part A	1	16324022000026
8.3	Evaporator part B	1	16324022000027
8.4	Solenoid valve (4-way)	1	16445029000006
8.5	Stainless steel braided hose	2	16445024000013
8.6	Bushing	1	11320101000030

8.7	Air outlet valve	1	16325052000137
8.8	Right connection plate of evaporator	1	16421120000019
9	Bearing fixed chassis	1	11320062000026
10	Bearing assembly	1	11220551000003
11	Cross flow fan	1	11220513000058
12	Chassis assembly	1	11220500000434
12.1	Chassis	1	11320001000365
12.2	Stopple	1	11333003000009
12.3	Air louver	1	11320135000023
12.4	Left-right swing blade	3	11320017000152
12.5	Manual air guide link	1	11320085000103
13	Mounting plate assembly	1	11221500000040
14	Pipe clamp	1	11320084000015
15	Air louver step motor	1	11230002000152
16	Step motor shaft sleeve	1	11320079000016
17	Main controller	1	11222549000026
18	WiFi controller	1	11222062000032
19	Drain hose	1	11320020000008
20	IDU fan motor	1	11230005000072
21	Motor support	1	11320087000031
22	Drain pipe assembly	1	11220506000013
23	Motor cover	1	16420030000003
24	Remote controller	1	11222001000925
25	Motor cover(in)	1	11320190000003

5.2 AFC-500WM/4A(Q*)-N、AFC-600WM/4A(Q*)-N

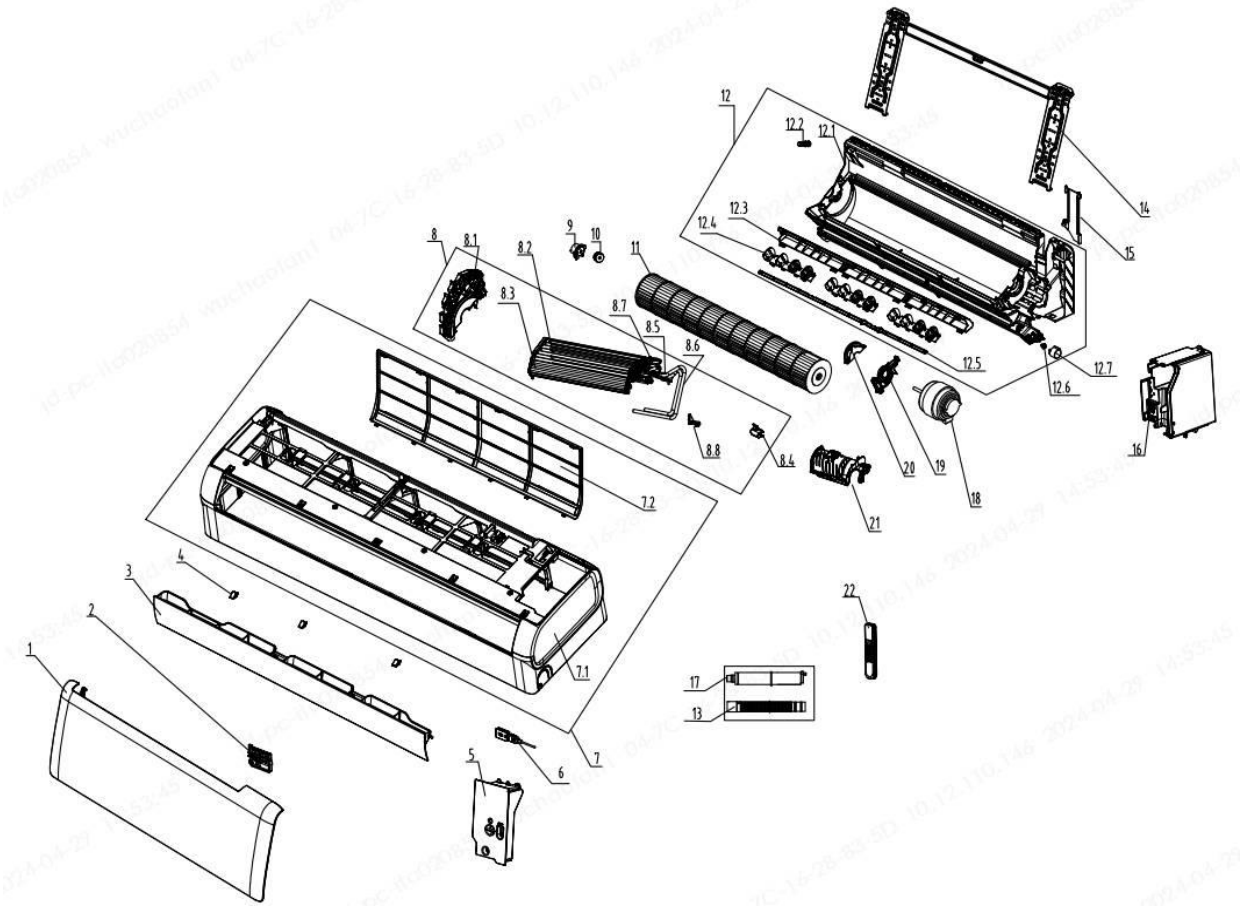

No.	Part Name	Quantity	BOM Code
1	Panel	1	11320003003716
2	Display board	1	11222014000804
3	Air louver (Horizontal)	1	11320005000469
4	Screw cover	3	11320096000120
5	Medium frame wiring cover	1	11320076000136
6	WiFi controller	1	11222062000032
7	Medium frame assembly	1	11220501001010
7.1	Medium frame	1	11320002000420
7.2	Filter	1	11220508000199
8	Evaporator assembly	1	16324018000150
8.1	Evaporator left side carriage	1	11320015000197
8.2	Evaporator assembly	1	16324022000028
8.3	Evaporator assembly	1	16324022000029

8.4	Evaporator protecting bush	1	11320101000018
8.5	Solenoid valve (4-way)	1	16445029000006
8.6	Stainless steel braided hose	2	16445024000013
8.7	Air outlet valve	1	16325052000137
8.8	Right connection plate of evaporator	1	16421120000019
9	Bearing fixed chassis	1	11320062000026
10	Bearing assembly	1	11220551000003
11	Cross flow fan	1	11220513000059
12	Chassis assembly	1	11220500000403
12.1	Chassis	1	11320001000316
12.2	Stopple	1	11333003000009
12.3	Air louver	1	11320135000026
12.4	Left-right swing blade	3	11320017000155
12.5	Air link	1	11320085000106
12.6	Step motor shaft sleeve	1	11320079000016
12.7	Air louver step motor	1	11230002000146
13	Drain hose	1	11320020000008
14	Mounting plate assembly	1	11221500000041
15	Pipe clamp	1	11320084000014
16	Main controller	1	11222549000026
17	Drain pipe assembly	1	11220506000013
18	IDU fan motor	1	11230005000107
19	Motor support	1	11320127000009
20	Motor cover (in)	1	11320190000003
21	Motor cover	1	16420030000004
22	Remote controller	1	11222001000925

6. Sound level

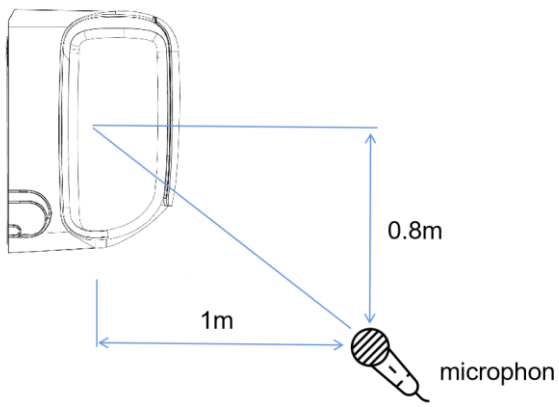

Note: No requirement for distance from the ground

6.1 Test value

Series	Models	Noise level under three speeds of fan (dB(A))		
		H	M	L
50HZ Q Series	AFC-200WM/4A(Q*)-N	32	26	24
	AFC-300WM/4A(Q*)-N	32	26	24
	AFC-400WM/4A(Q*)-N	45	39	33
	AFC-500WM/4A(Q*)-N	38	34	31
	AFC-600WM/4A(Q*)-N	44	42	36

6.2 NC curves

AFC-200WM/4A(Q*)-N

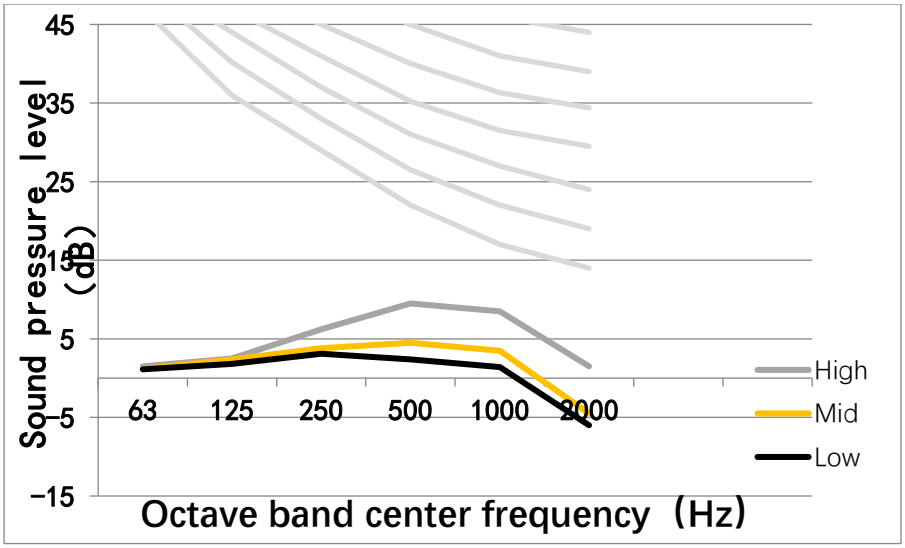

AFC-300WM/4A(Q*)-N

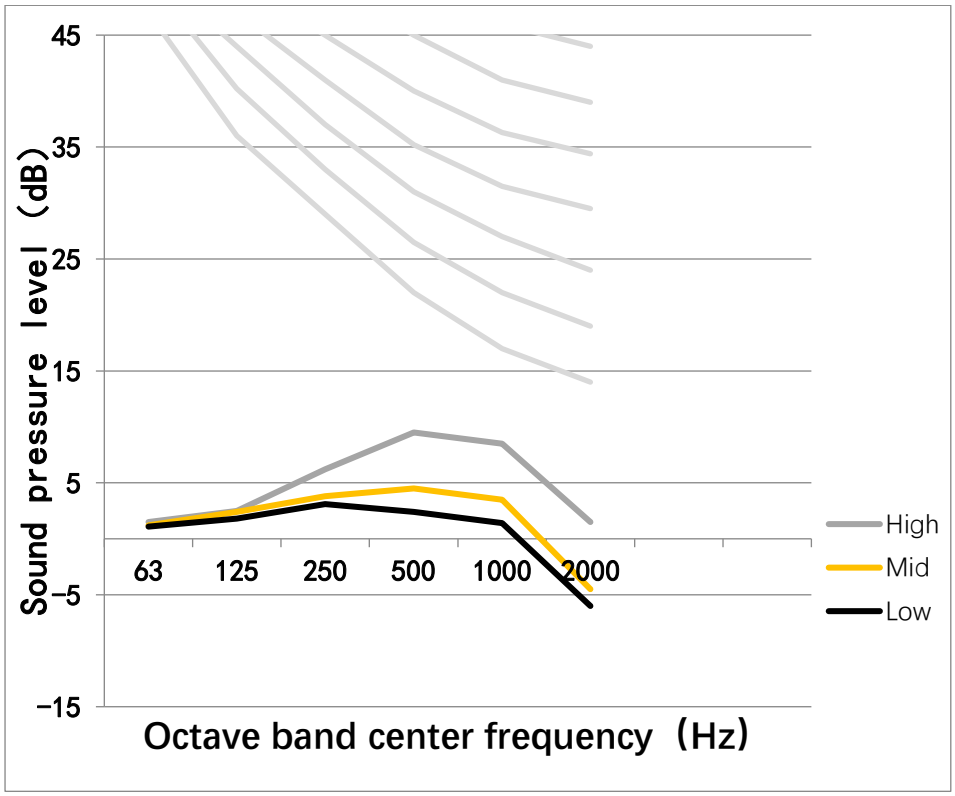

AFC-400WM/4A(Q*)-N

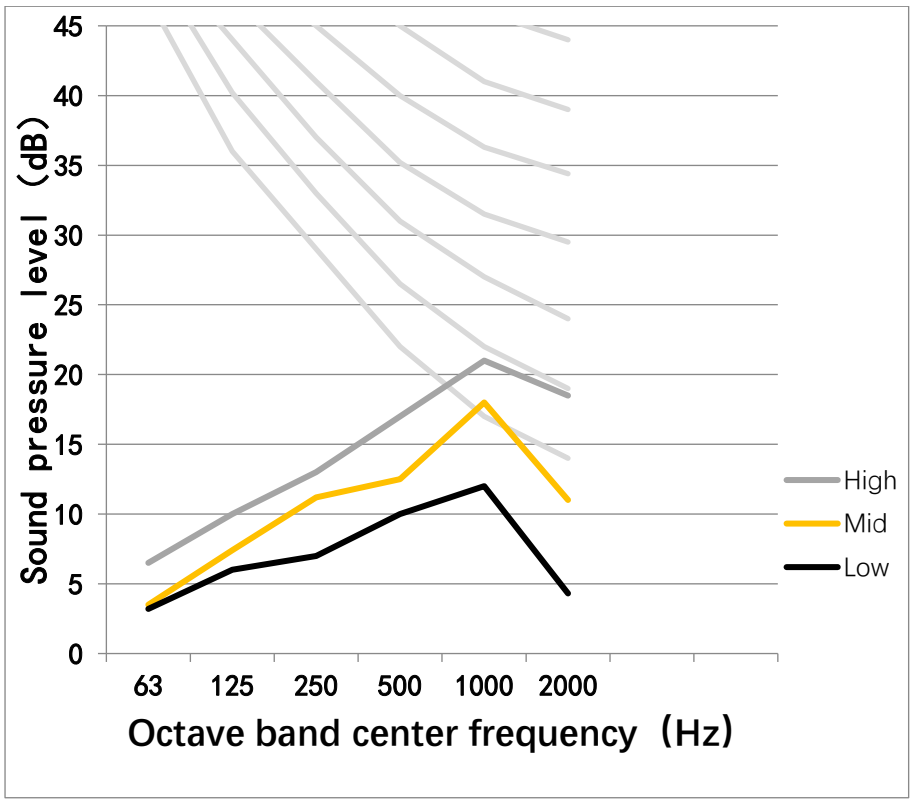

AFC-500WM/4A(Q*)-N

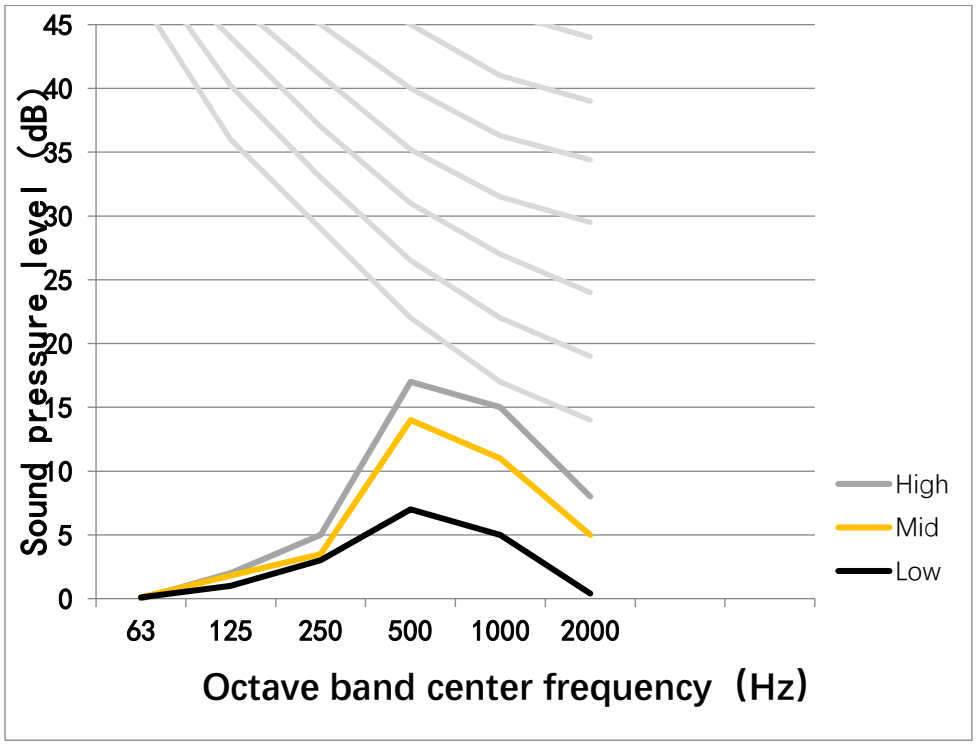

AFC-600WM/4A(Q*)-N

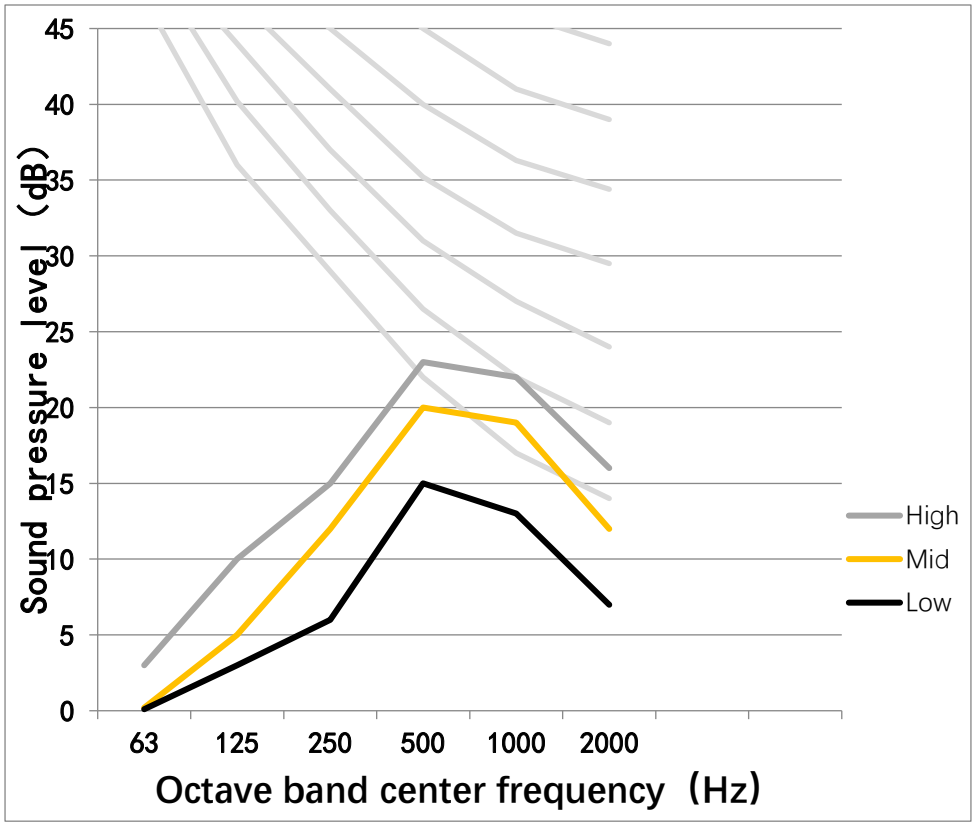

AFC-800WM/4A(Q*)-N

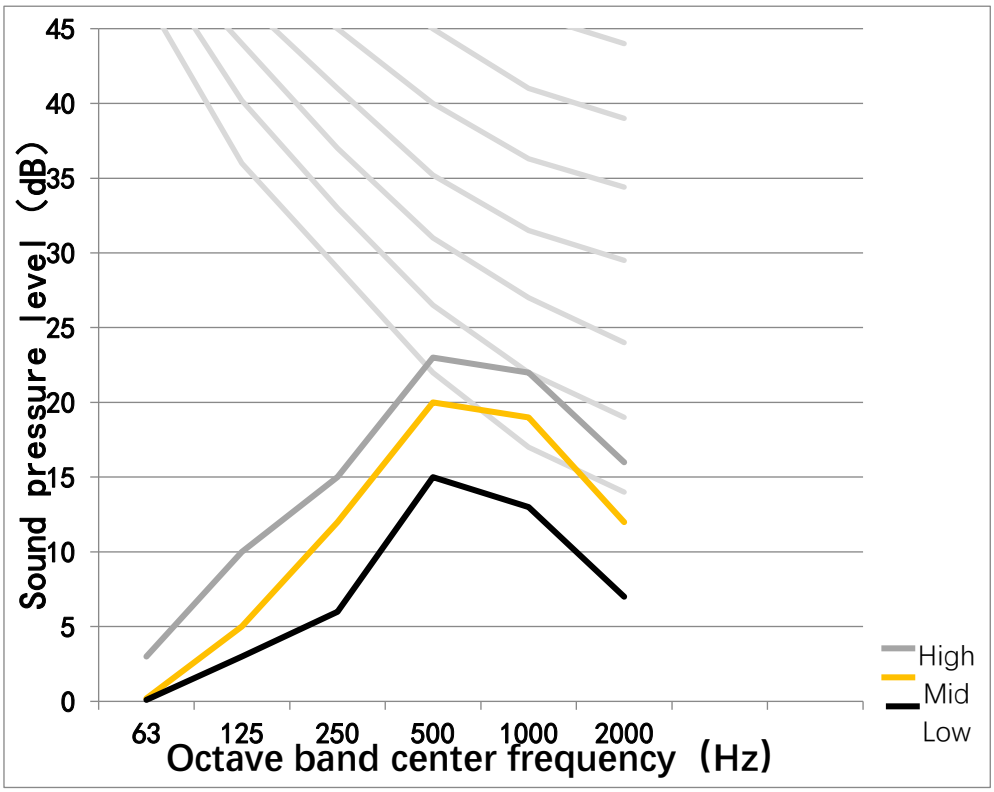

7. Capacity amendment

7.1 Table of variable working condition performance for cooling capacity

Table of variable working condition performance parameter under cooling mode

Unit: W

Air inlet temperature℃			26℃ DB/18. 7℃ WB						27℃ DB/19℃ WB					
Water inlet temperature ℃			5		7		9		5		7		9	
Model (CFM)	Water Flow (kg/h)	Water Pressure drop (k Pa)	TH	SH	TH	SH	TH	SH	TH	SH	TH	SH	TH	SH
200	150	25. 1	1822	1595	1612	1491	1386	1297	1868	1677	1698	1582	1426	1376
	250	27	2094	1791	1837	1658	1580	1442	2142	1901	1896	1760	1631	1549
	350	29. 2	2485	1946	2199	1785	1891	1553	2565	2027	2270	1877	1975	1671
	450	31. 1	2736	1986	2443	1822	2101	1585	2815	2088	2469	1916	2173	1667
300	300	31. 3	2204	1848	1950	1727	1677	1502	2258	2054	2053	1938	1725	1686
	400	33. 9	2533	2193	2222	2031	1911	1767	2591	2330	2293	2157	1972	1898
	500	36. 1	2973	2360	2631	2165	2263	1884	3069	2459	2716	2277	2363	2027
	600	37. 2	3308	2433	2954	2232	2540	1942	3404	2558	2986	2347	2628	2042
400	430	51	2941	2647	2603	2474	2239	2152	3015	2784	2741	2626	2302	2285
	550	53. 5	3380	2971	2965	2751	2550	2393	3458	3156	3060	2922	2632	2571
	650	55. 1	3969	3197	3512	2933	3020	2552	4096	3331	3625	3084	3154	2745
	750	56. 8	4416	3295	3943	3023	3391	2630	4543	3465	3985	3179	3507	2766
500	500	20. 1	3728	2908	3321	2591	2881	2247	3825	3137	3171	2600	2888	2339
	600	27. 3	4101	3076	3654	2740	3169	2377	4250	3443	3562	2886	3209	2567
	700	34	4511	3158	4019	2813	3486	2440	4670	3783	4142	3355	3605	2884
	800	41. 5	5007	3155	4461	2944	3869	2554	5189	3650	4552	3650	4006	3165
600	650	29. 6	4335	3554	3866	3170	3319	2722	4452	3651	3905	3202	3437	2818
	750	36. 2	4712	3816	4202	3404	3608	2922	4839	3920	4245	3438	3735	3026
	850	43. 1	5121	4097	4568	3654	3922	3137	5260	4208	4614	3691	4060	3248
	940	50. 7	5567	4453	4965	3972	4263	3410	5717	4459	5015	4096	4413	3222
800	650	29. 6	4335	3554	3866	3170	3319	2722	4452	3651	3905	3202	3437	2818
	750	36. 2	4712	3816	4202	3404	3608	2922	4839	3920	4245	3438	3735	3026
	850	43. 1	5121	4097	4568	3654	3922	3137	5260	4208	4614	3691	4060	3248
	940	50. 7	5567	4453	4965	3972	4263	3410	5717	4459	5015	4096	4413	3222

Variable working condition performance parameter table (continued)

Unit: W

Air inlet temperature ˚C			27˚C DB/19. 5˚C WB						28˚C DB/22˚C WB					
Water inlet temperature ˚C			5		7		9		5		7		9	
Model (CFM)	Water Flow (kg/h)	Water Pressure Drop (k Pa)	TH	SH	TH	SH	TH	SH	TH	SH	TH	SH	TH	SH
200	150	25. 1	1938	1643	1715	1521	1578	1506	2430	2048	2187	1946	1969	1673
	250	27	2232	1846	1975	1709	1718	1624	2784	2322	2533	2206	2280	1919
	350	29. 2	2673	2006	2365	1840	2058	1748	3313	2483	3048	2359	2743	2052
	450	31. 1	2911	2066	2599	1878	2261	1765	3618	2595	3292	2387	2930	2101
300	300	31. 3	2344	2013	2074	1864	1908	1845	2939	2509	2674	2384	2407	2050
	400	33. 9	2699	2261	2389	2094	2078	1989	3367	2845	3064	2702	2757	2351
	500	36. 1	3196	2433	2829	2232	2461	2120	3962	3011	3645	2860	3281	2489
	600	37. 2	3520	2485	3143	2301	2734	2163	4375	3180	3894	2798	3465	2462
400	430	51	3129	2727	2769	2525	2547	2500	3923	3399	3530	3229	3177	2777
	550	53. 5	3603	3063	3188	2836	2774	2695	4493	3853	4089	3661	3680	3185
	650	55. 1	4266	3296	3776	3023	3285	2872	5288	4079	4865	3875	4379	3371
	750	56. 8	4698	3429	4195	3117	3650	2930	5839	4307	5314	3963	4729	3487
500	500	20. 1	3714	2799	2878	2244	2846	2167	4209	3365	3887	3129	3295	2653
	600	27. 3	4159	2995	3510	2703	3234	2343	4838	3618	4468	3365	3788	2852
	700	34	4742	3082	4081	3020	3638	2546	5498	3849	5077	3580	4304	3034
	800	41. 5	5121	3581	4638	3354	4042	2985	6248	3653	5705	3455	4891	3075
600	650	29. 6	4677	3040	4045	2985	3613	2529	5438	3806	5062	3543	4275	2993
	750	36. 2	5098	3212	4429	3691	3920	2548	6036	4225	5669	3685	4874	3217
	850	43. 1	5506	3414	4872	3748	4351	2828	6760	4664	6236	3991	5605	3531
	940	50. 7	6057	3816	5408	3970	4786	3207	7571	5148	6922	4292	6165	3822
800	650	29. 6	4678	3883	4063	3251	3596	2949	5438	3969	5201	4057	4275	2993
	750	36. 2	5006	3204	4429	3691	3920	2548	6036	4225	5669	3685	4874	3217
	850	43. 1	5506	3414	4872	3748	4351	2828	6760	4664	6236	3991	5605	3531
	940	50. 7	6057	3816	5408	3970	4786	3207	7571	5148	6922	4292	6165	3822

7.2 Table of variable working condition performance for heating capacity

Table of variable working condition performance parameter under heating mode

Unit: W

Air inlet temperature ℃			18℃ DB						20℃ DB					
Water inlet temperature ℃														
Model (CFM)	Water flow (kg/h)	Water Pressure Drop (k Pa)	40	45	50	60	70	80	40	45	50	60	70	80
200	150	25.1	1887	2322	2757	3628	4499	5369	1730	2180	2595	3460	4325	5190
	250	27	2031	2499	2968	3905	4842	5779	1861	2308	2792	3722	4653	5583
	350	29.2	2213	2723	3234	4255	5276	6297	2029	2516	3044	4058	5073	6087
	450	31.1	2329	2911	3404	4479	5554	6629	2136	2648	3203	4271	5339	6407
300	300	31.3	2152	2649	3146	4139	5132	6126	1974	2487	2961	3948	4935	5922
	400	33.9	2310	2843	3376	4442	5508	6574	2098	2601	3146	4195	5244	6293
	500	36.1	2494	3069	3645	4796	5947	7098	2287	2836	3431	4574	5718	6861
	600	37.2	2625	3281	3836	5048	6260	7471	2407	2985	3611	4814	6018	7221
400	430	51	2955	3637	4319	5683	7047	8411	2710	3415	4065	5420	6775	8130
	550	53.5	3142	3867	4592	6042	7492	8942	2880	3571	4320	5760	7200	8640
	650	55.1	3351	4125	4898	6445	7992	9539	3074	3811	4610	6147	7684	9221
	750	56.8	3604	4505	5267	6930	8593	10256	3305	4098	4958	6610	8263	9915
500	500	20.1	3770	4611	5471	7035	8626	9951	3453	4260	5161	6934	8533	9983
	600	27.3	3965	4864	5759	7413	9099	10486	3627	4489	5427	7267	8992	10609
	700	34	4169	5131	6062	7812	9598	11049	3810	4730	5707	7615	9475	11274
	800	41.5	4384	5412	6381	8231	10125	11643	4002	4984	6001	7981	9984	11981
600	650	29.6	4028	4967	5871	7574	9294	11067	3661	4676	5507	7250	9077	10762
	750	36.2	4281	5273	6239	8048	9898	11783	3895	4933	5852	7721	9661	11437
	850	43.1	4549	5609	6630	8553	10541	12546	4143	5204	6219	8222	10284	12154
	940	50.7	4834	5961	7046	9089	11225	13358	4408	5489	6609	8757	10946	12916
800	650	29.6	4028	4967	5871	7574	9294	11067	3661	4676	5507	7250	9077	10762
	750	36.2	4281	5273	6239	8048	9898	11783	3895	4933	5852	7721	9661	11437
	850	43.1	4549	5609	6630	8553	10541	12546	4143	5204	6219	8222	10284	12154

	940	50.7	4834	5961	7046	9089	11225	13358	4408	5489	6609	8757	10946	12916

Table of variable working condition performance parameter under heating mode (continued)

Unit: W

Air inlet temperature ℃			21℃ DB						22℃ DB					
Water inlet temperature ℃														
Model	Water flow (kg/h)	Water Pressure Drop (k Pa)	40	45	50	60	70	80	40	45	50	60	70	80
200	150	25.1	1646	2049	2486	3359	4232	5072	1531	1955	2411	3258	4105	4953
	250	27	1788	2263	2701	3649	4562	5511	1664	2159	2620	3540	4496	5416
	350	29.2	1930	2443	2915	3940	4964	5949	1815	2317	2857	3861	4865	5907
	450	31.1	2032	2571	3110	4147	5225	6262	1891	2454	2977	4023	5068	6155
300	300	31.3	1878	2338	2836	3833	4829	5787	1747	2231	2751	3718	4684	5651
	400	33.9	2015	2550	3044	4113	5141	6211	1875	2434	2952	3990	5067	6104
	500	36.1	2176	2753	3286	4440	5595	6705	2045	2611	3220	4351	5483	6658
	600	37.2	2290	2898	3459	4674	5889	7058	2131	2766	3355	4534	5713	6937
400	430	51	2578	3210	3894	5262	6630	7946	2399	3062	3777	5104	6431	7758
	550	53.5	2767	3501	4179	5647	7059	8527	2574	3341	4053	5478	6956	8381
	650	55.1	2924	3700	4416	5968	7519	9011	2749	3509	4328	5848	7369	8948
	750	56.8	3144	3979	4813	6417	8085	9690	2926	3797	4606	6224	7843	9523
500	500	20.1	3086	3858	4483	5656	7705	9246	2892	3803	4699	6370	8001	9688
	600	27.3	3283	4104	4821	6285	8110	9732	3080	4008	4931	6692	8423	10196
	700	34	3493	4366	5184	6758	8537	10244	3280	4223	5174	7029	8866	10730
	800	41.5	3716	4645	5574	7189	8986	10784	3493	4450	5429	7383	9332	11292
600	650	29.6	3506	4371	5184	6818	8590	10244	3319	4190	5075	6888	8713	10874
	750	36.2	3722	4650	5544	7245	9129	10921	3527	4457	5396	7335	9274	11581
	850	43.1	3951	4947	5930	7699	9701	11643	3748	4740	5738	7812	9871	12333
	940	50.7	4195	5263	6342	8182	10309	12412	3983	5042	6101	8319	10507	13134
800	650	29.6	3506	4371	5184	6818	8590	10244	3319	4190	5075	6888	8713	10874
	750	36.2	3722	4650	5544	7245	9129	10921	3527	4457	5396	7335	9274	11581
	850	43.1	3951	4947	5930	7699	9701	11643	3748	4740	5738	7812	9871	12333
	940	50.7	4195	5263	6342	8182	10309	12412	3983	5042	6101	8319	10507	13134

8. Product selection

8.1. Precautions of product selection

a. At given airflow and temperature of a fan coil unit, when water supply changes, so does the cooling capacity. Based on statistics of the performance of some products, when water supply temperature is 7˚C at 80% water supply, the cooling capacity is about 92% of the original level, indicating slow effect of the water supply change to cooling capacity.

b. At given temperature difference between water supply and water return of a fan coil, the cooling capacity decreases with as the water supply temperature increases. According to statistics, if water supply temperature is increased by 1˚C, the cooling capacity will decrease by about 10%, the higher the water temperature is, the greater decrease the cooling capacity will suffer, with lowered humidity capacity.

c. At given water supply condition, when the airflow of a fan coil changes, so do its cooling capacity and enthalpy difference of air treatment, which usually increases as cooling capacity decreases, without much change in power consumption of unit cooling capacity.

d. When the temperature difference between inlet and outlet water of a fan coil increases, the water flow will decrease, so will the heat transfer coefficient of the heat exchange coil. The heat transferring temperature will also change, as a result, the cooling capacity of a fan coil increases as the temperature difference between supply and return water increases. According to statistics, when water supply temperature is at 7˚C, and the temperature difference between supply and return water has increased from 5˚C to 7˚C, the cooling capacity may decrease about 17%.

The water supply, water supply temperature, temperature difference between supply and return water, water flow and inlet air temperature and humidity interact with one another, with the performance of the fan coil changed by the variation of any one of them.

e. When a fan coil runs at standard condition, the final point of air treatment depends on the enthalpy difference of air treatment and the cooling capacity is related to the humidity load of the room, in that the greater the heat-humidity ratio, the smaller the cooling capacity is, as shown in Figure 1. So, the air treatment enthalpy difference of the fan coil can be determined by heat-humidity ratio curve, final point parameters of air treatment and air parameters, and then the cooling capacity of the fan coil can be calculated based on the air treatment enthalpy of the room at different heat-humidity ratio...

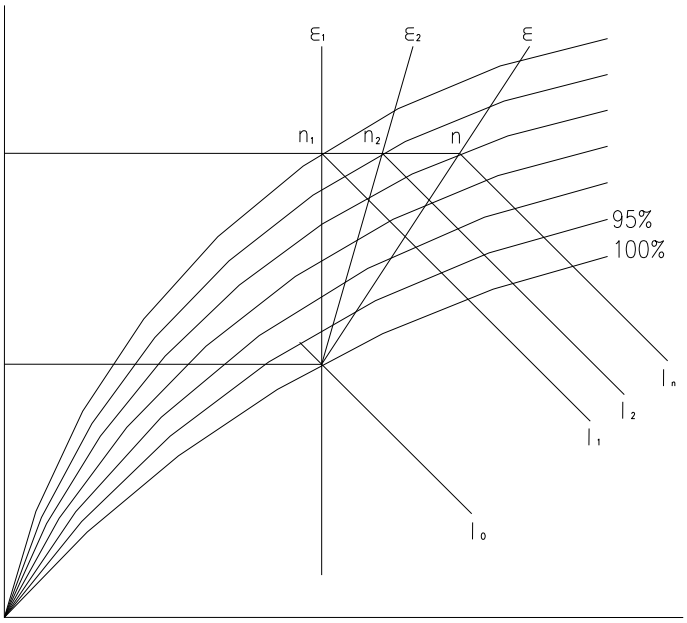

Figure 1 Air treatment temperature process of a fan coil

8.2. Methods of product selection

Enthalpy difference correction

Make corrections-based m-the ratio between the enthalpy difference during actual operation and that at standard condition, and calculate the actual cooling capacity of the fan coil, then select the correct fan coil based on actual cooling capacity.

Q'=QH· (△Im/△IH)=mQH

where: Q' —— Actual cooling capacity of a fan coil (W).

QH—— Rated cooling capacity at of a fan coil at standard condition (W).

△Im —— Actual air treatment enthalpy difference of a fan coil (W/kg)

△IH——Air treatment enthalpy difference of a fan coil at standard condition (W/kg)

m —— Correction coefficient

Airflow based type selection

Select a fan coil based on the air conditioning flow calculated by the cooling load of air conditioning and the actual air treatment enthalpy difference of the fan coil.

G=Q/△Im· (W)

Where: G——Air conditioning flow kg/h

Besides, when the water supply temperature, temperature difference of supply and return water, water supply and inlet air temperature are different than those of the standard condition, further correction is required based on the information.

9. Wiring diagram

AFC-200WM/4A(Q*)-N、AFC-300WM/4A(Q*)-N、AFC-400WM/4A(Q*)-N、AFC-500WM/4A(Q*)-N、AFC-600WM/4A(Q*)-N

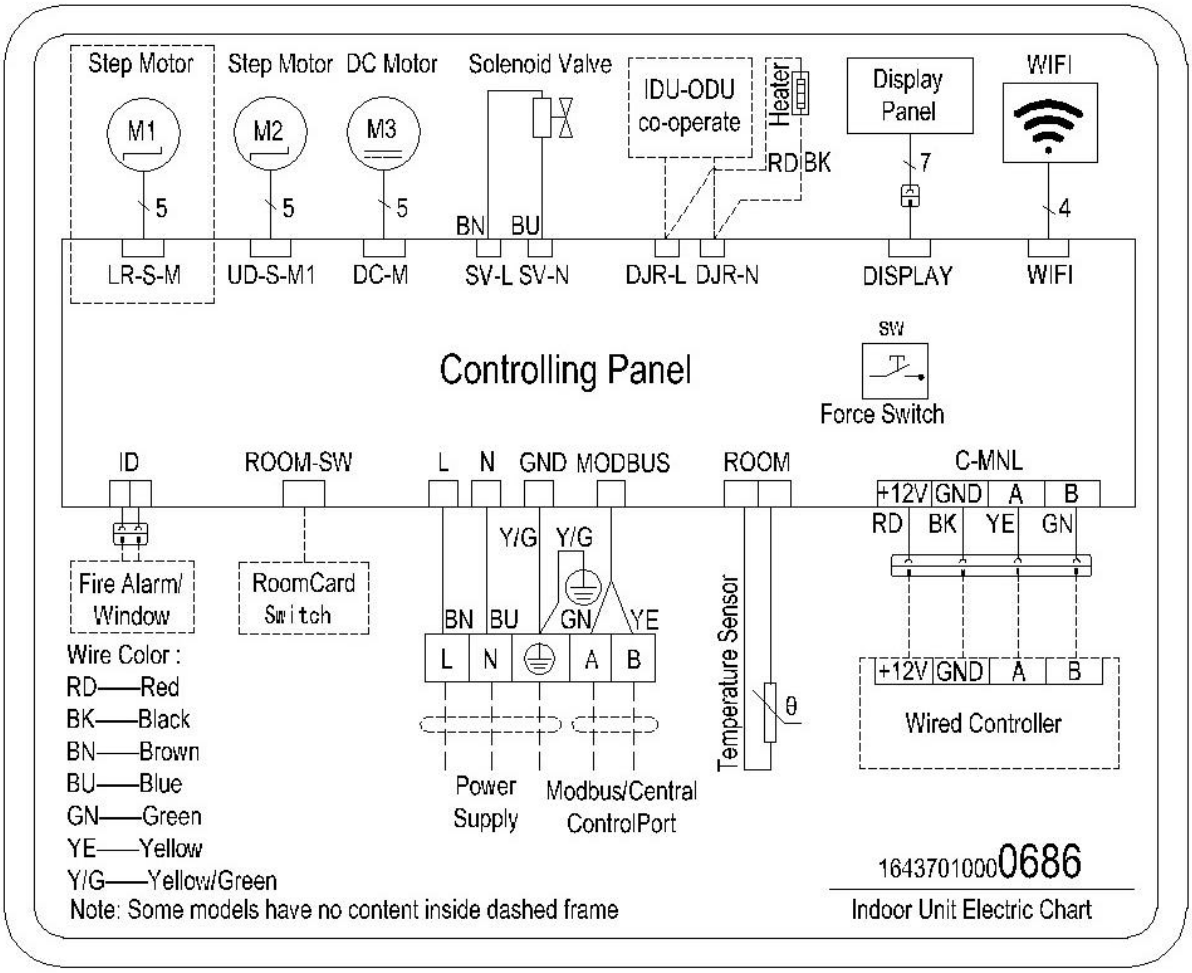

10. PCB Port Introduction

AFC-200WM/4A(Q*)-N、AFC-300WM/4A(Q*)-N、AFC-400WM/4A(Q*)-N、AFC-500WM/4A(Q*)-N、AFC-600WM/4A(Q*)-N

11222549000026 R 主控制器 FPB-1H-DC02-E1(SY)

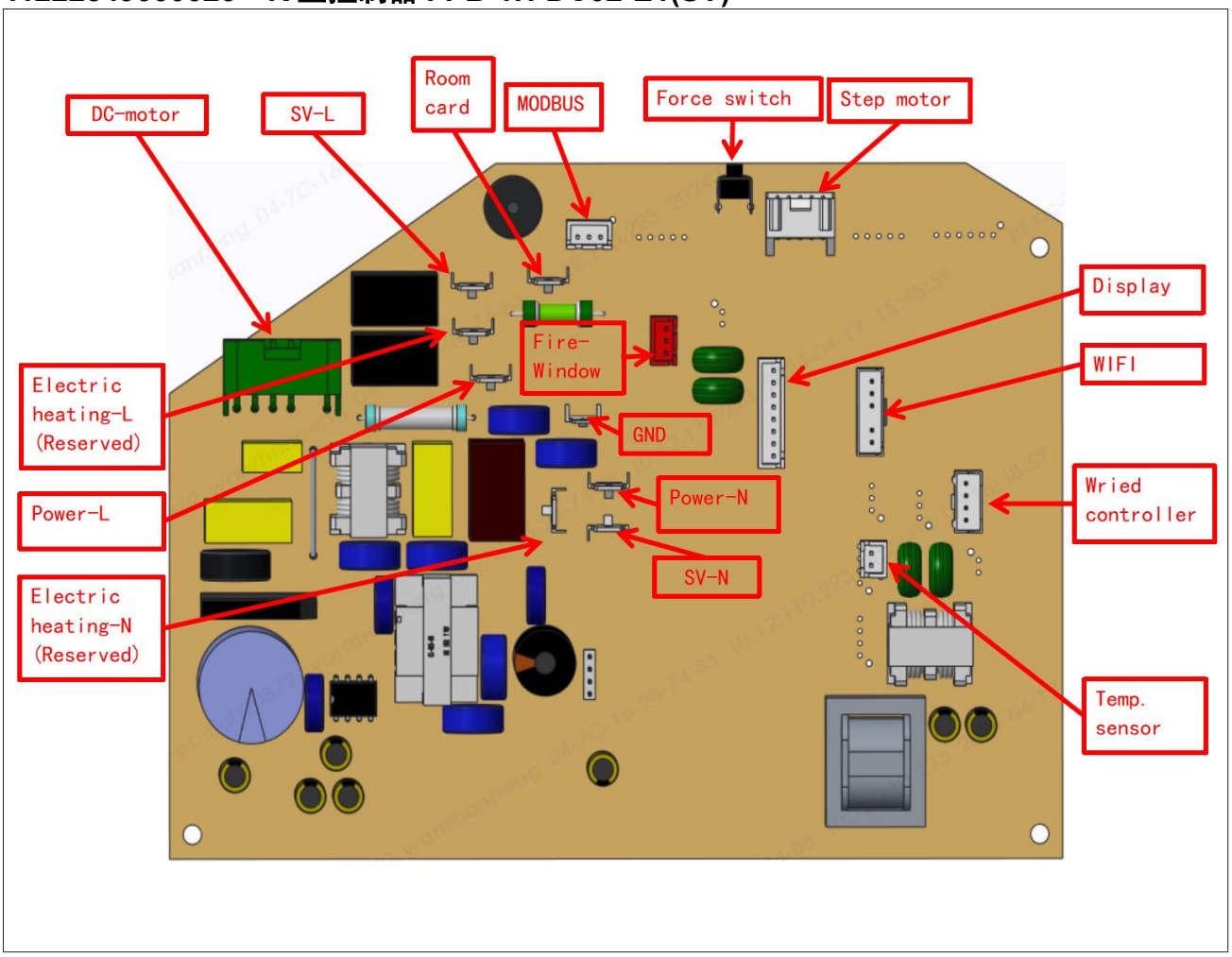

11. Split controller

Split Controller				
IDU Type	Standard	Optional		
	YK-T	YK-K	YK-L	XK-04
AFC-200WM/4A(Q*)-N AFC-300WM/4A(Q*)-N AFC-400WM/4A(Q*)-N AFC-500WM/4A(Q*)-N AFC-600WM/4A(Q*)-N				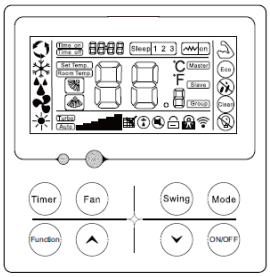

YK-T

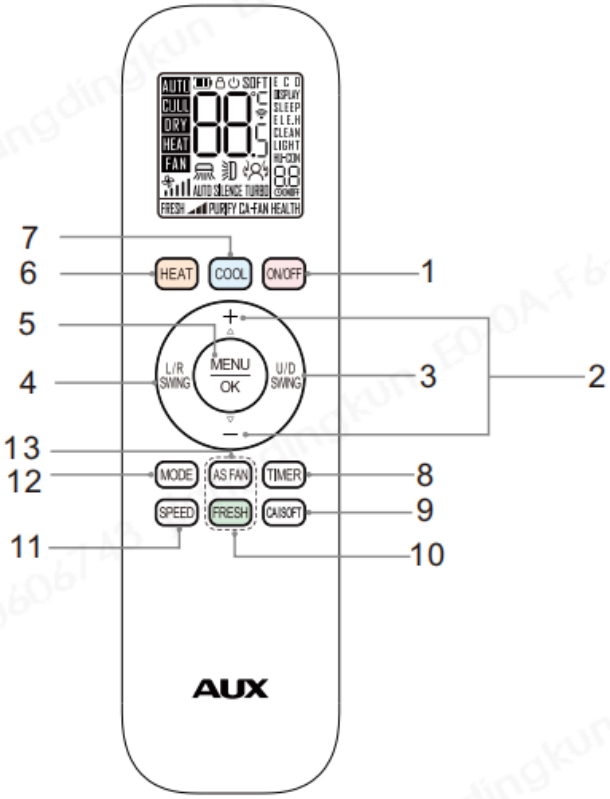

Button Overview

No.	Remote controller button functions	Is it available	Remark
1	ON/OFF Button	√	/
2	+ & - Button	√	/
3	U/D SWING Button	√	/
4	L/R SWING Button	×	No left or right swing
5	MENU & OK Button	√	/
6	HEAT Button	√	/
7	COOL Button	√	/
8	TIMER Button	√	/
9	CA SOFT Button	×	No Comfort Air Mode
10	FRESH Button	×	No Fresh Air Mode
11	SPEED Button	√	/
12	MODE Button	√	/
13	AS FAN Button	×	No Fresh Air Mode
14	ECO	×	No the function
15	DISPLAY	√	/
16	SLEEP	√	/
17	ELE.H	×	No electric heating
18	CLEAN	×	No self-cleaning
19	LIGHT	√	/
20	HEALTH	×	No health module
21	Child-lock	√	/

Buttons Description

1. ON/OFF Button

* Press this button to turn on/off the unit.

2. + & - Button

* Each time the “+” is pressed, the temperature setting will increase by 0.5℃ and each time the “-” is pressed, it will decrease by 0.5℃.

* The temperature setting range: 16℃~32℃.

Note: The temperature cannot be set in auto or fan mode.

3. U/D SWING Button

* Press this button to activate up/down swing and press it again to turn off the swing function.

4. L/R SWING Button

* Press this button to activate left/right swing and press it again to turn off the swing function.

Note:

* When the unit is on, press the “U/D SWING” button and hold for 3s, the button will shift to be the functional button of “Rated swinging”, and then press the “U/D SWING” button to select the positions of Rated swinging.
* Only by pressing the “U/D SWING” button again and hold for 3s or reinstall the battery of the remote control, can the “U/D SWING” button resume its original function. The power on/off button of the remote control can not enable the exit of the “Rated swinging” function.

5. MENU & OK Button

* Press the “MENU” button to enter the function selection mode. Then press △ , ▽ to choose the function which you want. After, press the “OK” button, turn on this function.
* In function selection mode, press △, ▽, the character in LCD will be flashing if the function can be selected.
* After entering the Function mode, if you do not press any active button within 10s after the current function text blinks, or operate other button, you exit the function mode and the corresponding function is not activate.

Note: Effective button in Function mode include: [OK]/ [△] / [▽].

6. HEAT Button

* Press this button to enter “HEAT” mode quickly.

7. COOL Button

* Press this button to enter “COOL” mode quickly.

8. TIMER Button

* With the unit on, press this button to set off timer or with it off to set on timer.
* Press this button once, the “ON(OFF)” will flash. Press “ + ” or “ - ” to set the number of hours in which the unit will be turned on/off, with an interval of 0.5h between 0.5 to 10h ,and with an interval of 1h between 10 to 24h, and a range of 0.5-24h.
* Press it again to confirm the setting, the “ON (OFF)” will stop flashing.
* If the “TIMER” button is not pressed within 10s after the “ON (OFF)” start flashing, the timer setting will be exited.
* If a timer setting is confirmed, press this button again will cancel it.

9. CA SOFT Button

* The air conditioner is opened and in the cooling mode, press CA|SOFT button, select the mode of “CARE FAN→ SOFT→OFF” to display corresponding characters.

Note:

* After the CA|SOFT function is opened, U/D SWING and L/F SWING or RATED SWING are fixed by default, and the wind speed is automatic by default.

* After the CA|SOFT function is opened, press the OFF or change the function mode, or set the swing mode, the function will be exited, but the swing is in the current state, the wind speed is adjusted state.

10. FRESH Button

* On or standby, press the FRESH button to display “FRESH” and “AS FAN” characters, and open the fresh function at the same time.

* In the FRESH mode, the initial AS FAN speed is low by default. Press AS FAN button to adjust the wind speed.

Note:

After the SLEEP function is enabled, the AS FAN wind speed is automatically converted to the low wind.

When CARE FAN, SOFT is turned on or turned off air conditioner, the same time FRESH function is turned off.

11. SPEED Button

* Press this button, you can select fan speed as follows:

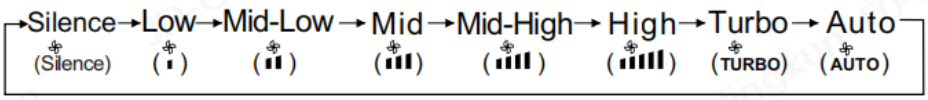

Note: Auto speed is not available in fan mode. Turbo speed is not available in auto mode. SPEED button is invalid in dry mode.

12. MODE Button

* Press this button, you can select operation mode as follows:

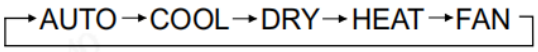

Note:

Heat mode is not available for cool only units.

Please read the Usage for Mode for a detailed description.

13. AS FAN Button

* In the FRESH mode, press AS FAN button and select “Low→Mid→High→Low” wind speed.

Note: AS FAN function can only be set under FRESH mode.

14. ECO

* In the COOL mode, the variable frequency air-conditioner will enter the ECO mode, which consumes the least electricity, and exit it automatically 8h after.

* The ECO mode is not available on the fixed frequency air conditioner.

* Changing modes or turning off the remote controller will automatically cancel the ECO function.

* In the COOL mode, press the “MENU” button, then press △ and ▽ to choose the “ECO” character, when the “ECO” character will blink, and press the “OK” button to highlight (not highlight) the “ECO” character, which will activate (deactivate) the ECO function.

Note:

The electricity consumption is affected by the ambient temperature and the house structure etc., and when the ambient temperature is high or the house has a large area, be cautious to use the ECO mode.

15. DISPLAY

* Press the “MENU” button, then press △ and ▽ to choose the “DISPLAY” character, when the character “DISPLAY” will blink, and press the “OK” button to activate (deactivate) the function of screen display.

16. SLEEP

* When the unit is on, press the “MENU” button, then press and to choose the “SLEEP” character, when the “SLEEP” character will blink, and press the “OK” button to highlight (not highlight) the “SLEEP” character , which will activate (deactivate) the function of sleep mode.

* The unit will exit SLEEP mode after 10h of continuous operation and restore to the previous status.

Note:

The sleep function cannot be activated in fan or auto mode.

In the sleep mode, the screen of the air-conditioner is off.

17. ELE.H

* When the unit is on and in the HEAT mode, press the “MENU” button, then press △ and ▽ to choose the “ELE.H” character, when the “ELE.H” character blinks, and press the “OK” button to highlight (not highlight) the “ELE.H” character , which will activate (deactivate) the function of auxiliary heating.

* The unit will activate the auxiliary heating function automatically according to the ambient temperature, so as to accelerate the heating.

18. CLEAN

* The unit will clean automatically the dusts on the evaporator and dry or blow-dry the moisture.

* When the air-conditioner is off, press the “MENU” button, then press △ and ▽ to choose the “CLEAN” character , when the “CLEAN” character will blink, and press the “OK” button to highlight (not highlight) the character “CLEAN”, which will activate (deactivate) the function of cleaning.

* When the CLEAN function is on, if you press the "ON/OFF" button, the air conditioner will be started immediately and the CLEAN function will be closed at the same time.
* The CLEAN function will close automatically after 30 min.

19. LIGHT

* The unit will activate or deactivate automatically the function of display on the air-conditioner screen according to the indoor ambient brightness.
* When the unit is on, press the “MENU” button, then press △ and ▽ to choose the “LIGHT” character, when the “LIGHT” character will blink, and press the “OK” button to highlight (not highlight) the character “LIGHT”, which will activate (deactivate) the function of light sensing.

Note:

Some air conditioners do not have this function. The specific function depends on the actual air conditioner.

20. HEALTH

* When the unit is on, press the “MENU” button ,then press △ and ▽ to choose “HEALTH” character, when the “HEALTH” character will blink, and press the “OK” button to highlight (not highlight) the “HEALTH” character, which will activate (deactivate) the health function.

21. Child-lock

* Press the “HEAT” and “MODE” buttons at the same time and hold for at least 3s to activate or deactivate the child-lock function.
* When the child-lock function is activated, the remote control will indicate “🔒”.

12. Main functions

12.1 Automatic mode control

1. Starting condition:

Start in automatic mode or switch from other modes to automatic mode for operation.

2. Control content:

When the unit enters automatic mode, the internal fan operates with low air flow and waits for the system to select the operating mode. After 20s, the air conditioner automatically selects cooling, heating, and air supply modes according to △T (△T=TA-TS) (TS sets the temperature range to 16-32℃):

1) When △T≥2℃, enter refrigeration mode;

2) When -2℃<△T<2℃, enter the air supply mode;

3) When △T≤-2℃, enter heating mode;

4) When TA malfunctions or there is no automatic mode model, operate in air supply mode;
5) After selecting the mode, it does not change with changes in indoor temperature. If the machine is turned on or mode is switched, the operating mode will be re selected.
6) Fan control:
After mode determination, the internal machine is controlled according to the corresponding fan logic.
3. End condition:
The controller shuts down or switches to other non automatic modes.

12.2 Cooling operation

1. Starting condition:
Turn on the refrigeration mode or switch from other modes to refrigeration mode for operation.
2. Control content:
The temperature control range is 16℃-32℃, and the wind speed can be selected from automatic wind, strong wind, high-speed wind, medium high wind, medium speed wind, medium low wind, low-speed wind, and silent wind. The action is as follows:

No.	Condition	Execute action
1	TA-TS≥1℃	Cold water valve open, execute set air
2	-1℃＜TA-TS＜1℃	①Keep the previous state ②Entering this interval for the first time, the cold water valve opens and the set air is executed
4	TA-TS≤-1℃	The cold water valve is closed, and the fan performs the following actions:： ①Stop the fan at high temperature: After the fan stops for 5 min, run the low air for 40s and execute the cycle ②No shutdown when reaching temperature: Set the air flow

3. End condition:
The controller shuts down or switches to other non cooling modes.

12.3 Heating mode control

1. Starting condition:
Start the heating mode or switch from other modes to heating mode for operation.
2. Control content:
The temperature control range is 16℃~32℃, and the wind speed can be selected from automatic wind, strong wind, high-speed wind, medium high wind, medium speed wind, medium low wind, low-speed wind, and silent wind. The action is as follows:

No.	Condition	Execute action
1	TA-TS≤-1℃	Open the hot water valve and execute the set air flow
2	-1℃＜TA-TS＜1℃	①Keep the previous state ②Entering this interval for the first time, the hot water valve opens and the set air is executed
4	TA-TS≥1℃	The hot water valve is closed, and the fan performs the following actions:： ①Stop the fan at high temperature: After the fan stops for 5 min, run the low air for 40s and execute the cycle ②Continuous fan at high temperature: set the air flow

3. End condition:

Controller shutdown or switching to other non heating modes

12.4 Dehumidification mode control

1. Starting condition:

Turn on the dehumidification mode or switch from other modes to dehumidification mode for operation.

2. Control content:

The temperature control range is 16℃~32℃, and the actions are as follows:

No.	Condition	Execute action
1	TA-TS≤-1℃	Cold water valve open, execute low wind speed
2	-1℃＜TA-TS＜1℃	①Keep the previous state ②Entering this interval for the first time, the cold water valve opens and low air is executed
4	TA-TS≥1℃	The hot water valve is closed, and the fan performs the following actions: ①Stop the fan at high temperature: After the fan stops for 5 min, run the low air for 40s and execute the cycle ②Continuous fan at high temperature: low wind speed

3. End condition

Controller shutdown or switching to other non dehumidification modes.

12.5 Air supply mode control

1. Starting condition:

Turn on the air supply mode or switch to air supply mode for operation.

2. Control content:

In the air supply mode, the internal fan operates at the set wind speed.

3. End condition:

The controller shuts down or switches to other non air supply modes.

12.6 Timing control function

1. Starting condition:

When receiving a "timed on" or "timed off" signal from the controller.

2. Control content:

1) After setting the timing function, the mode change does not cancel the timing function. If there is a timing light after setting the timing, the light panel will display the timing symbol. For specific timing setting methods, please refer to the remote control function manual;

2) The timing is controlled by the remote controller;

3) The timed shutdown function can only be set when the air conditioner is running, and it will automatically shut down when the timed time is up;

4) The timed on function can only be set when the air conditioner is turned off, and it will automatically turn on when the timed time is up;

5) After setting the timer, turn it on or off again, and the original timer will be automatically canceled.

3. End condition:

Timed or controller on/off operation.

4. Relationship with other controls:

Independent operation with line controller timing and WiFi timing settings.

12.7 Sleep control function

1. Starting condition:

When receiving a "sleep" signal from the controller (remote controller, wired controller, APP, central controller).

2. Control content:

Effective sleep function during refrigeration, dehumidification, and heating; The sleep function is invalid in shutdown, automatic, and air supply modes.

After entering sleep, the indoor fan has a low-speed wind speed and the screen display immediately turns off. Press the "screen display" button during sleep will display the current state for 10s. After 10s, the display will be turned off (if the remote control button is operated within 10s, the display light board will be delayed for 10s after the last operation ends). After exiting sleep, the screen display will return to the previous sleep state;

If a temperature increase or decrease signal is received during sleep, the air conditioner operates at the set temperature after the increase or decrease, and the entire sleep temperature curve synchronously shifts according to the increase or decrease amplitude;

The cooling mode sleep control is as follows:

During the cooling sleep operation, when the set temperature is automatically adjusted according to the sleep curve, it cannot exceed the maximum value between the remote control set temperature and 28℃. (For example: Set 27℃ to enter sleep, adjust the temperature to 28℃ after 1h; run for another 1h, set the temperature to still be 28℃; run for another 5h, set the temperature to still be 28℃, run for another 3h, exit sleep mode, set the temperature to 27℃)

3. End condition:

Shutdown, sleep control completed, or cancel sleep through the controller (remote controller, wired controller, APP, central controller).

4. Relationship with other controls:

During sleep, set the temperature range to [16~32].

12.8 Fire alarm and window opening linkage function

Determine the operating status of the indoor unit by setting the EE17 # parameters (0: no linkage mode, 1: window opening linkage mode, 2: fire alarm linkage mode) and passive contact status.

Fire alarm linkage mode

1. Dry contact closure (fire alarm triggered):

Immediately switch to shutdown mode, the internal machine does not receive control from the control end.

2. Dry contact disconnection (fire alarm released):

Maintain the shutdown state, and the internal machine can receive commands from the control end.

Window opening linkage mode

1. Dry contact closure for 30s (window opening):

Immediately switch to shutdown mode, and the internal machine can receive commands from the control end for control.

2. Dry contact disconnection (window closing):

① If there is no command from the control end, restore the state before closing;

② If there is a control end command, keep the control end command executing.

12.9 DIY Sleep

1. Start condition: The user sets the sleep DIY curve through the app.

2. Control content: Sleep function is effective in cooling, dehumidification, and heating modes. The sleep function is invalid in shutdown, automatic, and air supply modes. The air conditioner operates according to the received sleep DIY set temperature and set wind speed. DIY sleep has a higher priority than regular sleep.

3. End condition:

Turn off, complete sleep control, or cancel sleep through the app.

12.10 One control multiple by wired controller

1. Setting instructions: Distinguish between master and slave machines. The factory defaults to slave machines, which can be set through EE3 #. For 1-master machines, the setting value is ≥ 2-slave machines, and the maximum can be set to 16. That is, a one control multiple networks can only contain a maximum of 16 units (including master)

2. Function Description:

A. Only one master can be set up in the same one control multiple networks, and the rest must be slaves, otherwise faults may occur

B. After successfully setting up the master, only one wired controller can be connected

C. One control multiple can only achieve simultaneous opening or closing

3. Installation instructions:

A. Set corresponding master and slave parameters through monitoring, wired controllers, etc.

B. Open the electrical control box, pull out the control board,

C. Find the corresponding interface of the wired controller, which has reserved connecting wires. You can directly strip the wires for connection

D. The interface corresponding to the color of the connecting wire has been marked in the electrical schematic diagram

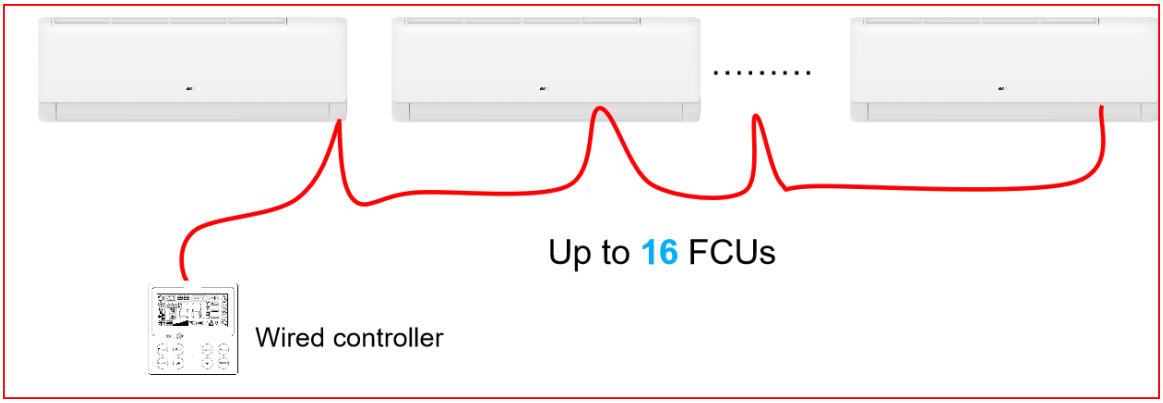

12.11 Built in MODBUS/centralized control

1. Setting instructions: No need to set, please refer to the actual device connected for details

2. Function Description:

A. After MODBUS/central control is enabled, the remote control, wired controller, and WiFi cannot be set to turn on/off, set windshield, set temperature, or set mode anymore

B. If the room card permission is locked by MODBUS/central control, the room card will be limited and controlled by MODBUS/central control

C. Sleep mode is not limited by MODBUS/centralized control

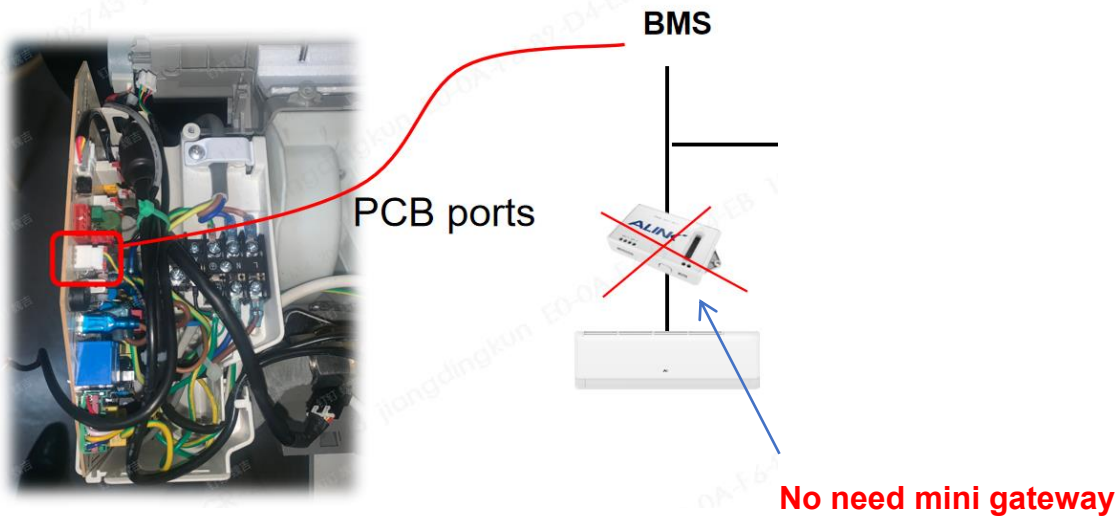

12.12 Indoor unit address inquiry

1. Setting instructions:

A. Set through the wired controller: press and hold the function+mode keys for 5s

B. Set through the remote controller: Press the sweeping button about 10 times in a row, with an interval of no more than 2s between each press. The buzzer will sound once to enter the address query function

2. Function description: For the dual 8 display light board model, the digital tube remains turned off within 2s, the internal device address is displayed for 4s after 2s, and then the digital tube is turned off. After 2 seconds, a long sound is heard to exit the address query

3) Block address query function when in sleep or screen display off state

12.13 Forced ON/OFF function

1. Setting instructions: No need to set, achieved by pressing the forced switch

2. Function Description:

A. When the remote control and wire control lose their function (battery depleted, damaged, lost, etc.) and all user control commands are invalid, the unit can be controlled to turn on or off by pressing the forced switch

B. When the unit is turned on, press the forced switch to shut down the unit

C. When the unit is shut down, press the forced switch, and the unit will operate in automatic mode. The up, down, left, and right swing of the air will not swing, and other additional functions will be canceled (swing position memory, strong windshield, silent windshield, electric heating, sleep, timing, etc.)

3. Note: When the central control is locked or the room card is disconnected, the forced switch is invalid, and the buzzer will sound twice for a short time

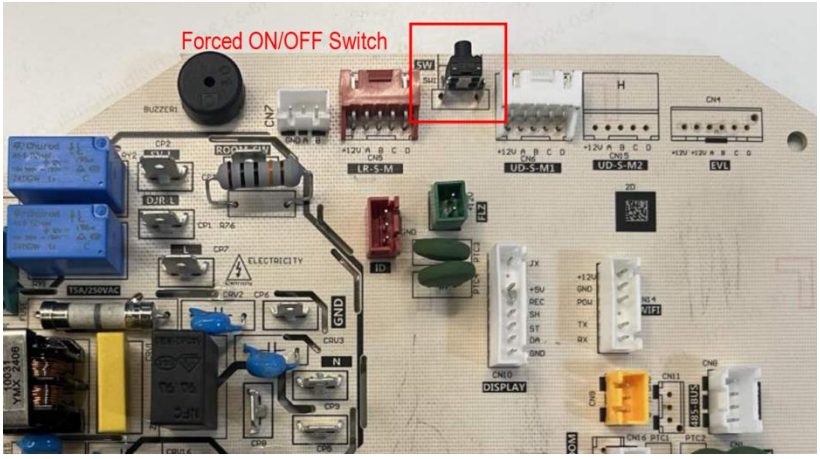

12.14 DIY Sleep

1. Setting instructions: Users can set the sleep DIY curve through the app

2. Function Description:

A. Available during cooling, heating, and dehumidification

B. The shutdown, automatic, and air supply sleep functions are invalid

C. The unit operates according to the received sleep DIY set temperature and set wind speed

3. Note: DIY sleep has a higher priority than regular sleep

12.15 Room card function

Parameter	Function	**Insert** key card	**Remove** key card
0901	**Valid**	Standby, IDU **can** be controlled	Standby, IDU **can't** be controlled

Wiring diagram

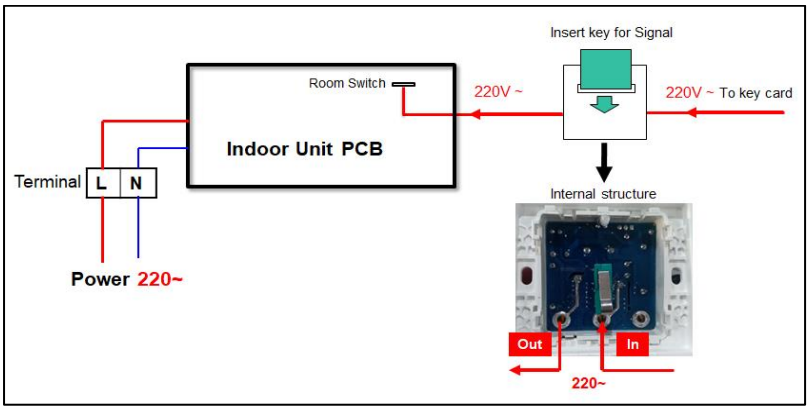

13. Installation

13.1 Unpacking Inspection

1) Open the box and check the FCU in area with good ventilation (open the door and window) and without ignition source. (Note: Operators are required to wear anti-static devices)

2) The fire prevention equipment and anti-static precautions shall be prepared well before checking.

13.2 Safety Principles for Installing FCU

1) Fire prevention device shall be prepared before installation.

2) Keep installing site ventilated. (open the door and window)

3) Anti-static precautions in necessary for installing air conditioner, e.g. wear pure cotton clothes and gloves

4) Keep leak detector in working state during the installation

5) Keep electric appliance, power switch, plug, socket, high temperature heat source and high static away from the area underneath sidelines of the unit.

6) The FCU shall be installed in an accessible location to installation and maintenance, without obstacles that may block air inlets or outlets of indoor/outdoor units, and shall keep away from heat source, inflammable or explosive conditions.

7) When installing or repairing the FCU and the connecting line is not long enough, the entire connecting line shall be replaced with the connecting line of the original specification, extension is not allowed.

8) Use new connection pipe, unless re-flaring the pipe

13.3 Requirements for Installation Position

1) Avoid places of inflammable or explosive gas leakage or where there are strongly aggressive gases.

2) Avoid places subject to strong artificial electric/magnetic fields.

3) Avoid places subject to noise and resonance.

4) Avoid severe natural conditions (e.g. Heavy lampblack, strong sandy wind, direct sunshine or high temperature heat sources).

5) Avoid places within the reach of children.

6) Select where it is easy to perform service and repair and where the ventilation good.

13.4 Installation environment inspection

When using electric drill to make holes in the wall, check first whether there is pre-buried pipeline for Water, electricity and gas. It is suggested to use the reserved hole in the wall.

13.5 Select installation site

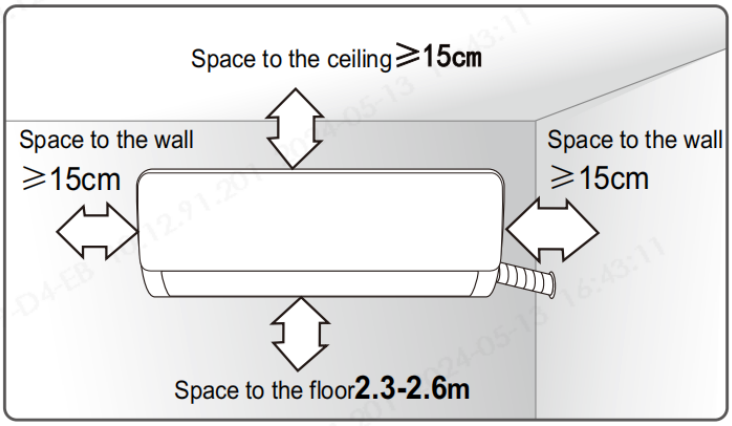

1) There should be nothing that will block the air circulation;
2) Good air circulation inside the room should be ensured;
3) Easy to avoid noise;
4) Choose connection tube can be derived. The position of outdoor convenient
5) Don't install the product near the porch;
6) Allow maintenance and installation space;
7) To ensure the distance between the product and the ceiling and other decorations as illustrated in the picture;
8) The distance between the product and the floor should be about 2.3-2.6m.

13.6 Installation

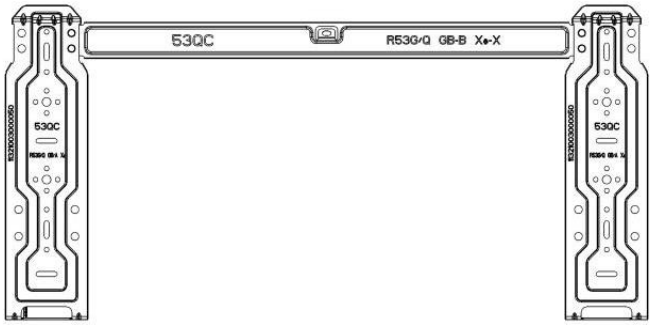

1) Fix the hanging board on the wall with4"+"typo bolts. Ensure that the board is wall positioned both horizontally and vertically. The wall should be hard enough to avoid vibration.
2) Drill a hole on the bottom left or right of the board of70mmin diameter. Note that the hole should lean outwards a bit.
3) Hang the indoor unit on the board; Ensure that the clasps on the indoor unit are in the rights lots on the board.
4) There is a stand for the anti-bacterial net on the wind intake. Open the lid on the top of the stand and put the net in. Close the lid.
5) Pushing the machine towards the left down and right down side of the installation board until the hangers enters tightly the grooves (it produces "click" sound).

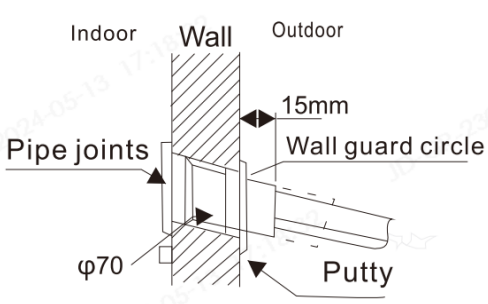

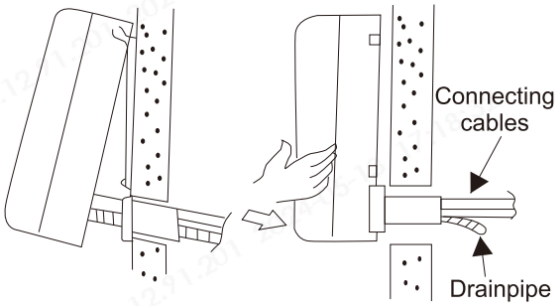

13.7 Drainage checking

1) Take down the grid from the indoor unit. The grid should be taken down during maintenance as follows:

①Take off the two bolts on the two sides of the front grid as illustrated in the picture;

②Hold the bottom of the grid and pull it towards yourself;

Repeat the above operations from ② to ① and you can put back the grid. Please ensure that the grid is installed properly after that. (There is slight difference in grid installation among different models)

2)drainage checking

①Pour a cup of water into the plastic drainage slot

②Confirm that the water runs through the drainage hole of the unit.

13.8 Connection method

1) Connection method of indoor unit

Open the cover the terminal box cover. Connect the cables according to the electric connection diagram.

Note: Line on the wiring terminal muse be pressed, not any shake.

2) Please pay attentions to it while connecting power cable.

After cables are connected correctly, bind connecting tubing, connecting line and drain pipes with binding tapes

13.9 System testing and leaking

Fan coil air conditioning system before testing system the first to formulate hydraulic test plan, choose appropriate try Pressure pump and formulate the water pressure. In the test the process to test the situation seriously records. And monitor the system. The changes of pressure, hydraulic test scheme formulated to pay attention to the following:

1) add water to coll must open set before the water head put air valve, to offer the best air pipe line after close the valve.

2) Water pressure test should be done on the temperature conditions above 5℃, otherwise should take anti-freeze measures.

3) The hydro static test to block the boost when the boost slow even, to stop the pump pressure after stability by carefully.

Check the connection is leaking. Shall not take water pressure to repair work.

4) In the system to add water must be layered adding water, layered exhaust, the test operation step by step.

5) Pipeline check the system without leakage, a final according to the design plan for the thermal insulation pipe to deal with.

Bend the plan to make the system pressure should be followed by low to high flow, the principle of excessive enters step by stop, and be at follow all of the above, or is likely to fan coil units and system pipeline caused structural damage.

13.10 Use and maintenance

1) Installation ends, shall carefully check whether fan motor operation is normal after electrify. If any abnormal must immediately find reason after cut off power supply.

2) During the time chiller stop working, the system should be filled with water to reduce pipeline corrosion; but in winter should take ant freezing measures to avoid heat exchanger copper tube cracking.

3) Chiller using cold water temperature should be not less than 6 ℃, hot water temperature no higher than 65 ℃,requires clean water, preferably demineralized water.

4) To achieve the best heat transfer effect of the chiller, we advise you to open the exhaust valve on the system pipeline when your first time uses, in order to remove the air inside the pipe.

5) Air filter should be cleaned regularly according to the using environment clean level, so as not to affect the heat transfer performance and ventilation.

6) After two years operation, you should take a comprehensive maintenance for the whole system of the chiller. You can clean pipes and heat exchanger to remove dirt with chemical methods. Our factory can provide professional services.

Note: For more information, please refer to the installation manual

14. Trouble shooting

14.1. Poor efficiency explanation

During the process of using air conditioner, some phenomenon seems to be malfunction but actually not. Thus, when cooling effect does not achieve to your expectation, the following factors have to be ruled out

Phenomenon	Causing explanation
Power voltage is too low, causing AC uneasy to start and shut down after starting, or fuse be burned out etc.	It is not malfunction, need to find out the causing, if the causing is the electricity net voltage is too low, user should load a power manostat to keep voltage between 220V-380V for AC normally running
Select high wind speed but indoor temperature still at high side, air flow from the air outlet is too weak.	It is because air filter is too dirty or blocked making cooling capacity fail to be brought by air flow, causing cooling capacity inadequate. Take out filter and wash, the problem will be solved.
Select high wind speed, the vibration and sound of unit are severe.	Fan runs at high speed, severe vibration and sound of unit is normal phenomenon
Improper installation will lead to indoor temperature uneven or bad cooling effect.	It is necessary to adjust AC installation position

14.2 Electric components malfunction inspection

No.	Component name	Inspection methods
1	Control board	1. Check if any connection part of PCB loosens or drop off, printed tinsel and components have any burn, fade, breaking off or aging phenomenon, all joints exist short circuit phenomenon etc. 2. Test the circuit board system in the term of voltage, pulse on, resistance variation, by using testing meter. 3. Judge the output and input are normal or not according to electric principle diagram
2	Capacitor	1. No expansion phenomenon apparently 2. Measure capacitor by using capacitor phase of multi-meter (if the multi-meter has no capacitor phase, use ohm phase, contact the two terminals of meter to two feet of capacitor, and quickly switch positive pole and negative pole and reconnect, the resistance should display from nil to infinite quickly. The resistance can't change is always nil or infinite).
3	Motor	1. No burning trace apparently 2. Using multi-meter ohm phase, there is correct resistance value among windings (single phase compressor refers to specification, three phase compressor resistance approximately equal), resistance of winding should be infinite.

14.3 Failure code

When the air conditioner is faulty, the timing light of the controller's light panel will display relevant trouble codes according to various troubles.

Failure cause	Display code
Environment temperature sensor fault	E1
Water full protection	E4
Communication failure of wired controller	E5
Fan motor fault	F4

◇Self-check function

After holding down the forced switch and powering on, the buzzer will emit two short sounds to enter the self-check process:
Electric heating action, fan running with high-speed wind→Digital tube display “11” “22” “33” “44”→The operation light is on for 1s→Heating indicator light on for 1s→The cooling indicator light is on for 1s→Sleep indicator light on for 1s→The dehumidification indicator light is on for 1s →The timed indicator light is on for 1s→The cooling electric valve operates for 1s→The cooling electric valve operates for 1s→The fan runs at low wind for 1s→The fan runs at mid wind for 1s →After the fan operating at high wind speed for 2s→The buzzer sounds briefly, the electric heating and fan are turned off, and the air conditioning enters standby mode, ending the self-check.

◇Power failure memory setting

Within 5 s, press the sleep button 10 times continuously, and the buzzer will sound continuously for 4 short times, indicating that it has entered the power-off memory mode. Within 5 s, press the sleep button 10 times continuously, and the buzzer will beep continuously for 2 short times, indicating that it has exited the power-off memory mode.

14.4 Failure analysis

No action after Power-on

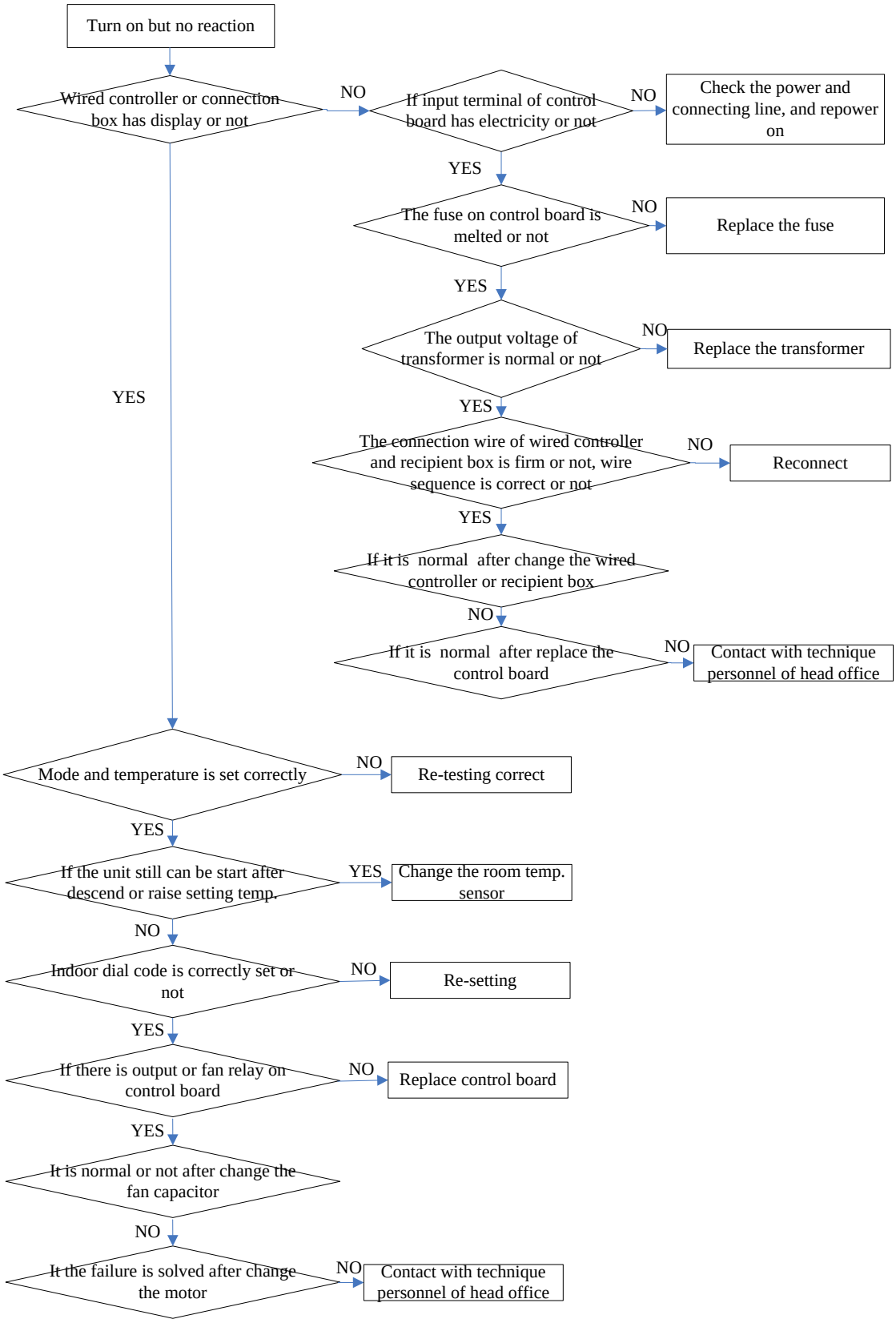

Poor Performance during Unit Operation

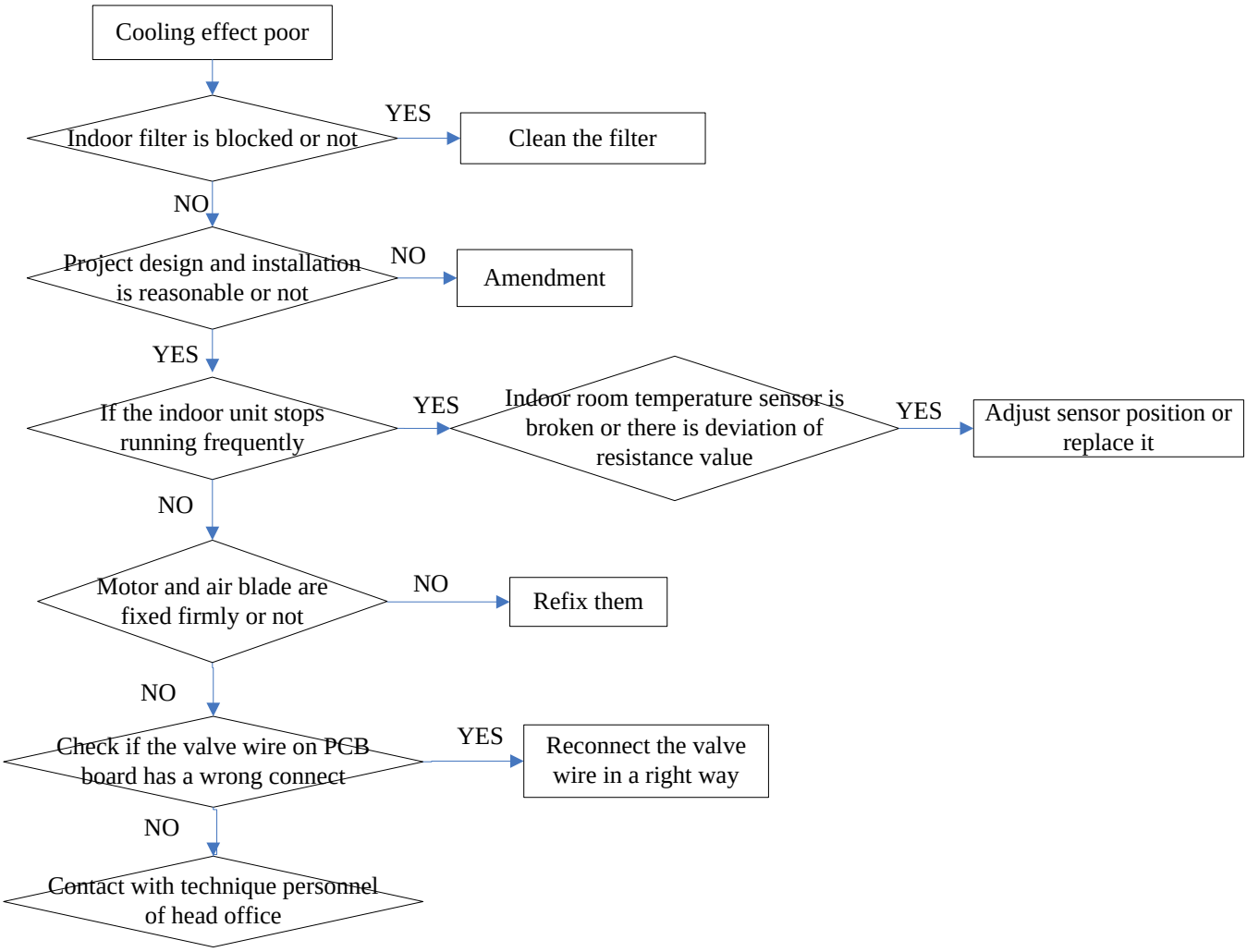
Cooling effect poor
Indoor filter is blocked or not
YES
Clean the filter
NO
Project design and installation is reasonable or not
NO
Amendment
YES
If the indoor unit stops running frequently
YES
Indoor room temperature sensor is broken or there is deviation of resistance value
YES
Adjust sensor position or replace it
NO
Motor and air blade are fixed firmly or not
NO
Refix them
NO
Check if the valve wire on PCB board has a wrong connect
YES
Reconnect the valve wire in a right way
NO
Contact with technique personnel of head office

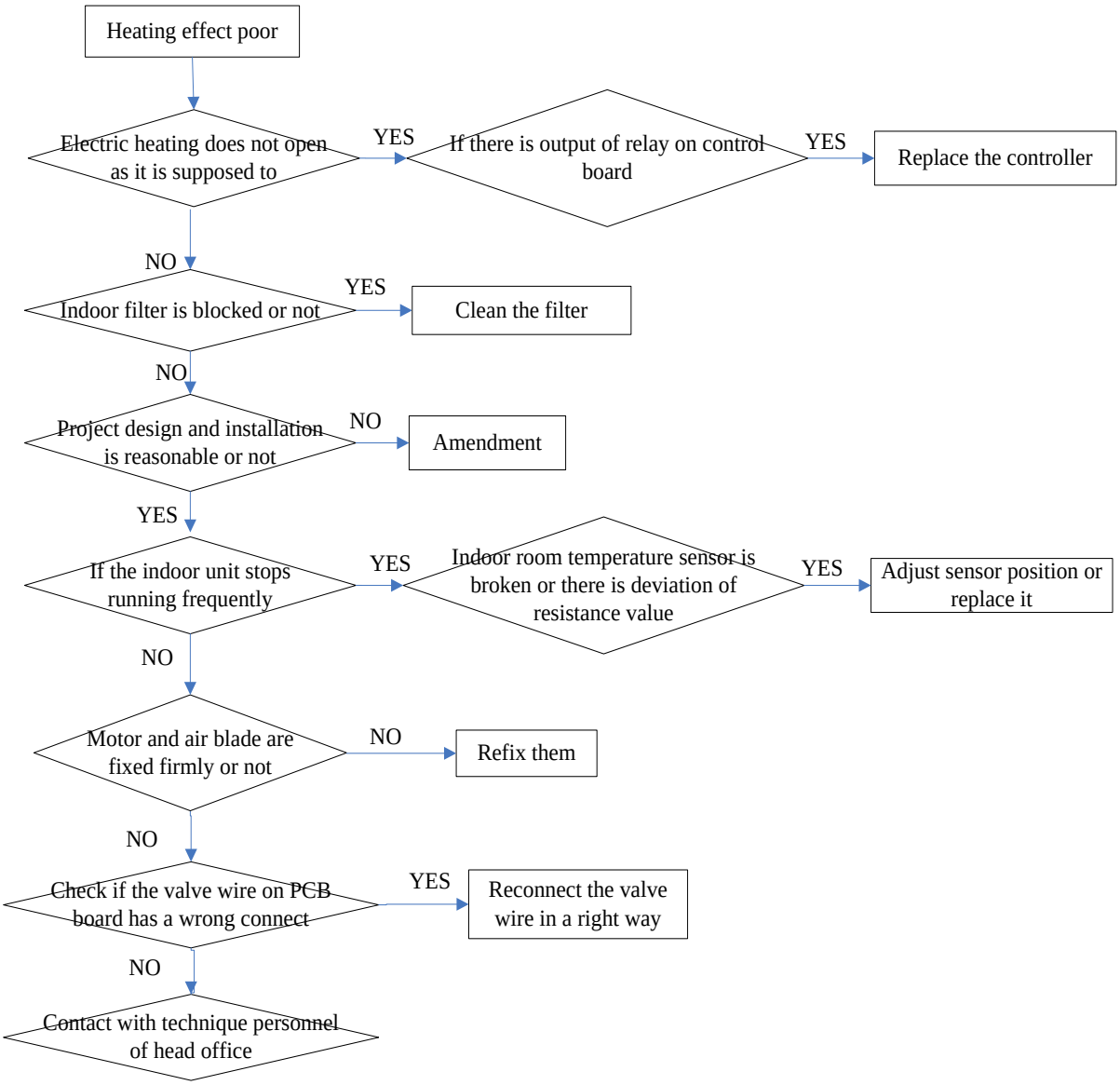
Heating effect poor
Electric heating does not open as it is supposed to
YES
If there is output of relay on control board
YES
Replace the controller
NO
Indoor filter is blocked or not
YES
Clean the filter
NO
Project design and installation is reasonable or not
NO
Amendment
YES
If the indoor unit stops running frequently
YES
Indoor room temperature sensor is broken or there is deviation of resistance value
YES
Adjust sensor position or replace it
NO
Motor and air blade are fixed firmly or not
NO
Refix them
NO
Check if the valve wire on PCB board has a wrong connect
YES
Reconnect the valve wire in a right way
NO
Contact with technique personnel of head office

Abnormal Sound or Much Vibration of Unit

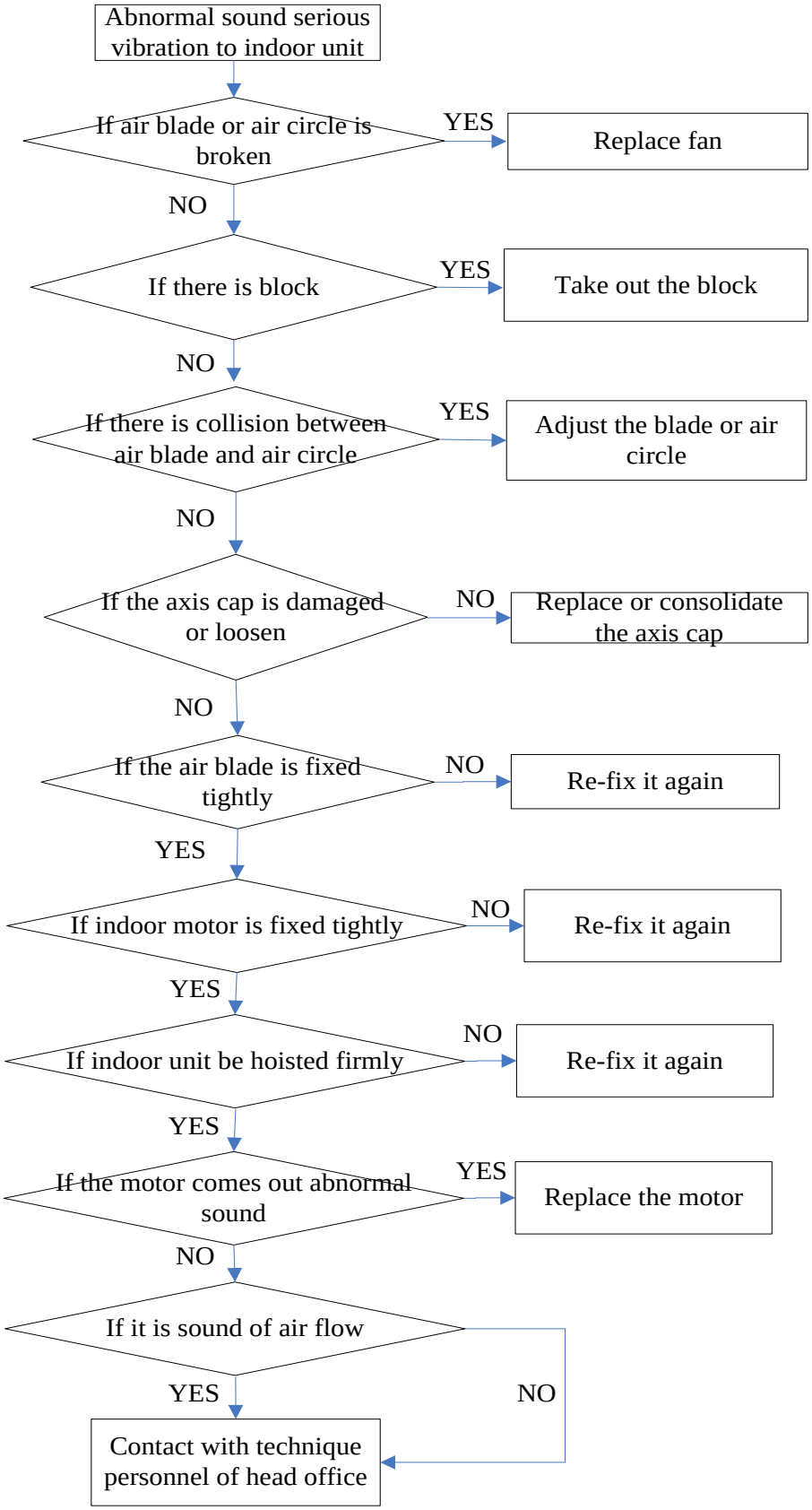

Peculiar Smell of Unit

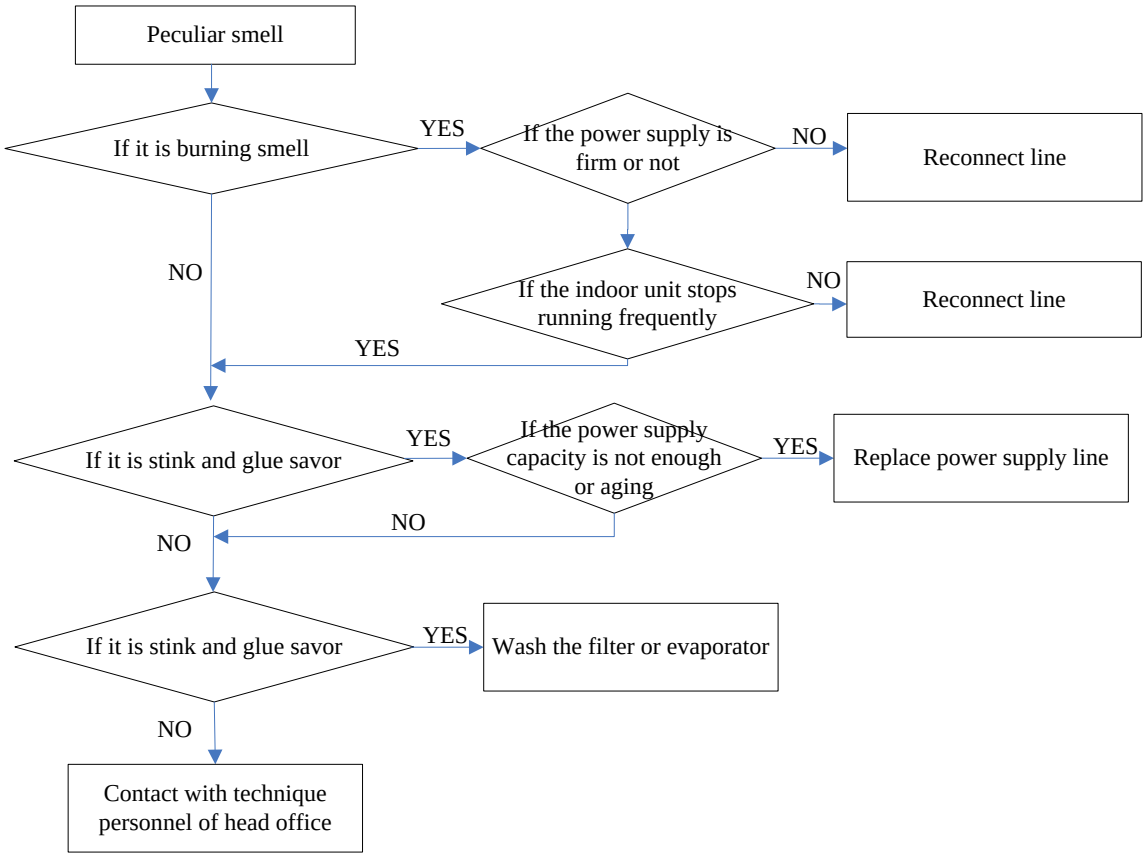

Water Leakage of Unit

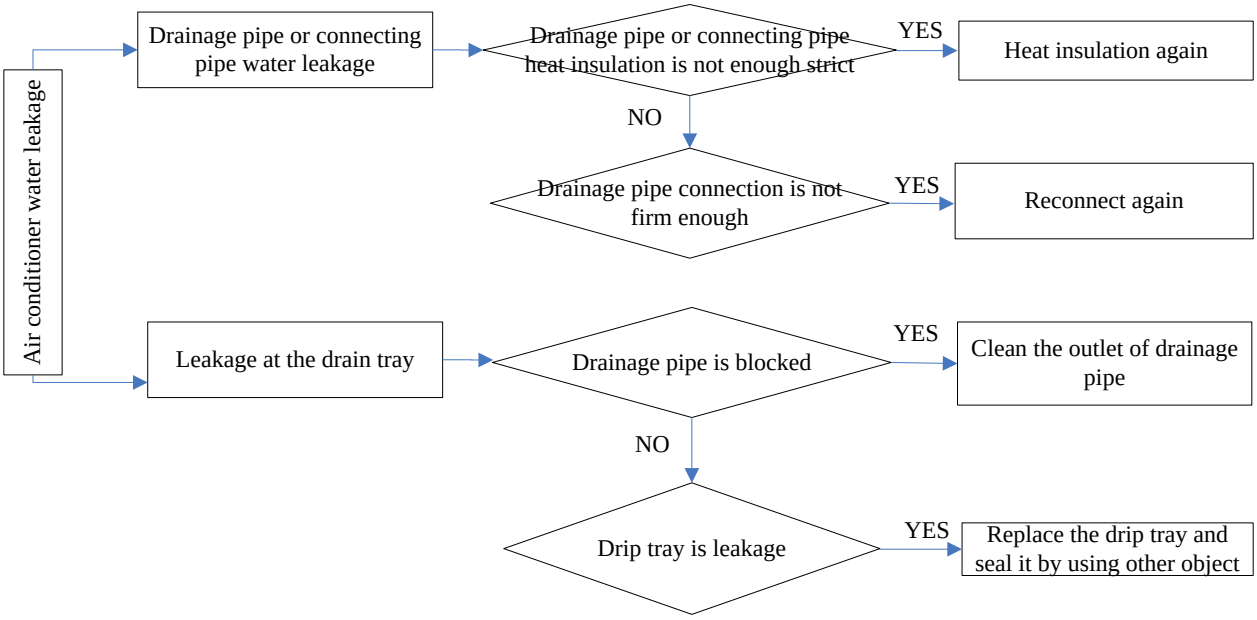

NINGBO AUX ELECTRIC CO., LTD

Add: NO. 1166 North Mingguang Road, Jiangshan, Ningbo, Zhejiang, PR. China

E-mail:auxcac@mail.auxgroup.com

Http://auxcac.cn

Tel: +86-574-88220564

The above designs and specifications are subject to charge without prior notice. Final specifications please refer to latest technical specification provided by sales representative.

Technology leads Intelligent life

NINGBO AUX ELECTRIC CO., LTD

Update record

Version	Modification	Date
V1	New content: Q series walled mounted FCU	2024.5.15