Technical and Service Manual

R290 Monoblock

Air to Water Heat Pump

Capacity	Models
4kw	ACHP-H04/4R2HA-M ACHP-H04/4R2HA-M(NE)
6kw	ACHP-H06/4R2HA-M ACHP-H06/4R2HA-M(NE)
8kw	ACHP-H08/4R2HA-M ACHP-H08/5R2HA-M ACHP-H08/4R2HA-M(NE)
10kw	ACHP-H10/4R2HA-M ACHP-H10/5R2HA-M ACHP-H10/4R2HA-M(NE)
12kw	ACHP-H12/4R2HA-M ACHP-H12/5R2HA-M ACHP-H12/4R2HA-M(NE) ACHP-H12/5R2HA-M(NE)
14kw	ACHP-H14/4R2HA-M ACHP-H14/5R2HA-M ACHP-H14/4R2HA-M(NE) ACHP-H14/5R2HA-M(NE)
16kw	ACHP-H16/4R2HA-M ACHP-H16/5R2HA-M ACHP-H16/4R2HA-M(NE) ACHP-H16/5R2HA-M(NE)

Version 2

2024-07-01

Contents

ATTENTION 3

Part 1 General Information 4

Part 2 Features 10

Part 3 Piping System 11

Part 4 Layout of Functional Components 23

Part 5 Dimension 25

Part 6 Electrical Principle Diagram 27

Part 7 Capacity Amendment 29

Part 8 Hydraulic Performance 32

Part 9 Sound Levels 33

Part 10 Wired Controller 35

Part 11 Control 41

Part 12 PCB Instruction 60

Part 13 Drain Hole 60

Part 14 Trouble Shooting 66

ATTENTION

- Products using R290 refrigerant, use, maintenance room area should be greater than 15 square meters.
- Avoid fire sources within 2 meters of the air conditioner use area, and the installation height of the indoor unit must not be less than 2.2 meters.
- Power and heat sources that may generate sparks, such as sockets, are not allowed under the indoor unit.
- No longer tube, no additional refrigerant.
- Vacuum for more than 15 minutes and hold pressure for 5 minutes. Ensure that the system vacuum meets the requirements. Avoid leakage of refrigerant into air during operation.
- Smoking is strictly prohibited within 2 meters of the heat pump. If any abnormal phenomenon is found (such as burning smell, etc.), please cut off the power supply immediately and contact the maintenance center. It is forbidden to dismantle the machine for maintenance by non-professional personnel.
- No matter what the case of charging and discharging system refrigerant, the unit must be placed in an outdoor open position, it is recommended to use professional equipment to release, to avoid excessive flow greatly generate static electricity.
- The bottle should be placed in a ventilated place, the storage temperature should not exceed 50℃, flammable materials are strictly prohibited around, and refrigerant tank is strictly prohibited to be filled and used repeatedly.
- Before maintenance and installation, it is necessary to carry a combustible gas detector to confirm that the user's R290 has not reached the alarm concentration and can be operated within the safe range.
- When servicing electrical components, disconnect the power supply before servicing. All improper operations that may cause sparks, such as metal collisions, should be avoided during replacement.

Part 1 General Information

1.1 Nomenclature

Monoblock

1	2	3	4		5	6	7		8	9	10	11	12		13	14
A	C	H	P	-	H	0	4	/	4	R	2	H	A	-	M	(NE)

NOTE:

1、A：AUX

2、C：Chiller

3、H：Heat

4、P：Pump

5、H：Cooling and heating

6-7、Capacity：04:4kW; 06:6kW; 08:8kW; 10:10kW; 12:12kW; 14:14kW; 16:16kW;

8、Power supply：4：220V-240V-1N~50Hz；5：380V-415V-3N~50Hz

9-10、R2：R290

11、H：High efficiency

12、A：Design number

13、M：Monoblock

14、(NE)：No electric heating; have electric heating omitted

1.2 Unit appearance

Capacity	Model	Appearance
4kW	ACHP-H04/4R2HA-M ACHP-H04/4R2HA-M(NE)	
6kW	ACHP-H06/4R2HA-M ACHP-H06/4R2HA-M(NE)	
8kW	ACHP-H08/4R2HA-M ACHP-H08/5R2HA-M ACHP-H08/4R2HA-M(NE)	
10kW	ACHP-H10/4R2HA-M ACHP-H10/5R2HA-M ACHP-H10/4R2HA-M(NE)	
12kW	ACHP-H12/4R2HA-M ACHP-H12/5R2HA-M ACHP-H12/4R2HA-M(NE) ACHP-H12/5R2HA-M(NE)	
14kW	ACHP-H14/4R2HA-M ACHP-H14/5R2HA-M ACHP-H14/4R2HA-M(NE) ACHP-H14/5R2HA-M(NE)	
16kW	ACHP-H16/4R2HA-M ACHP-H16/5R2HA-M ACHP-H16/4R2HA-M(NE) ACHP-H16/5R2HA-M(NE)	

1.3 Product line

Capacity	Model	Power supply	Electric heating (Optional)	SCOP (35℃)	SCOP (55℃)
4KW	ACHP-H04/4R2HA-M ACHP-H04/4R2A-M(NE)	220V-240V-1N~50Hz	3KW	A+++	A+++
6KW	ACHP-H06/4R2HA-M ACHP-H06/4R2A-M(NE)				
8KW	ACHP-H08/4R2HA-M ACHP-H08/4R2A-M(NE)				
10KW	ACHP-H10/4R2HA-M ACHP-H10/4R2A-M(NE)				
12KW	ACHP-H12/4R2HA-M ACHP-H12/4R2A-M(NE)				
14KW	ACHP-H14/4R2HA-M ACHP-H14/4R2A-M(NE)				
16KW	ACHP-H16/4R2HA-M ACHP-H16/4R2A-M(NE)				
8KW	ACHP-H08/5R2HA-M	380V-415V-3N~50Hz	9kW	A+++	A+++
10KW	ACHP-H10/5R2HA-M				
12KW	ACHP-H12/5R2HA-M ACHP-H12/5R2A-M(NE)				
14KW	ACHP-H14/5R2HA-M ACHP-H14/5R2A-M(NE)				
16KW	ACHP-H16/5R2HA-M ACHP-H16/5R2A-M(NE)				

Note：“(NE)” means no electric heating

1.4 Selection and System Design

1.4.1 Selection procedure

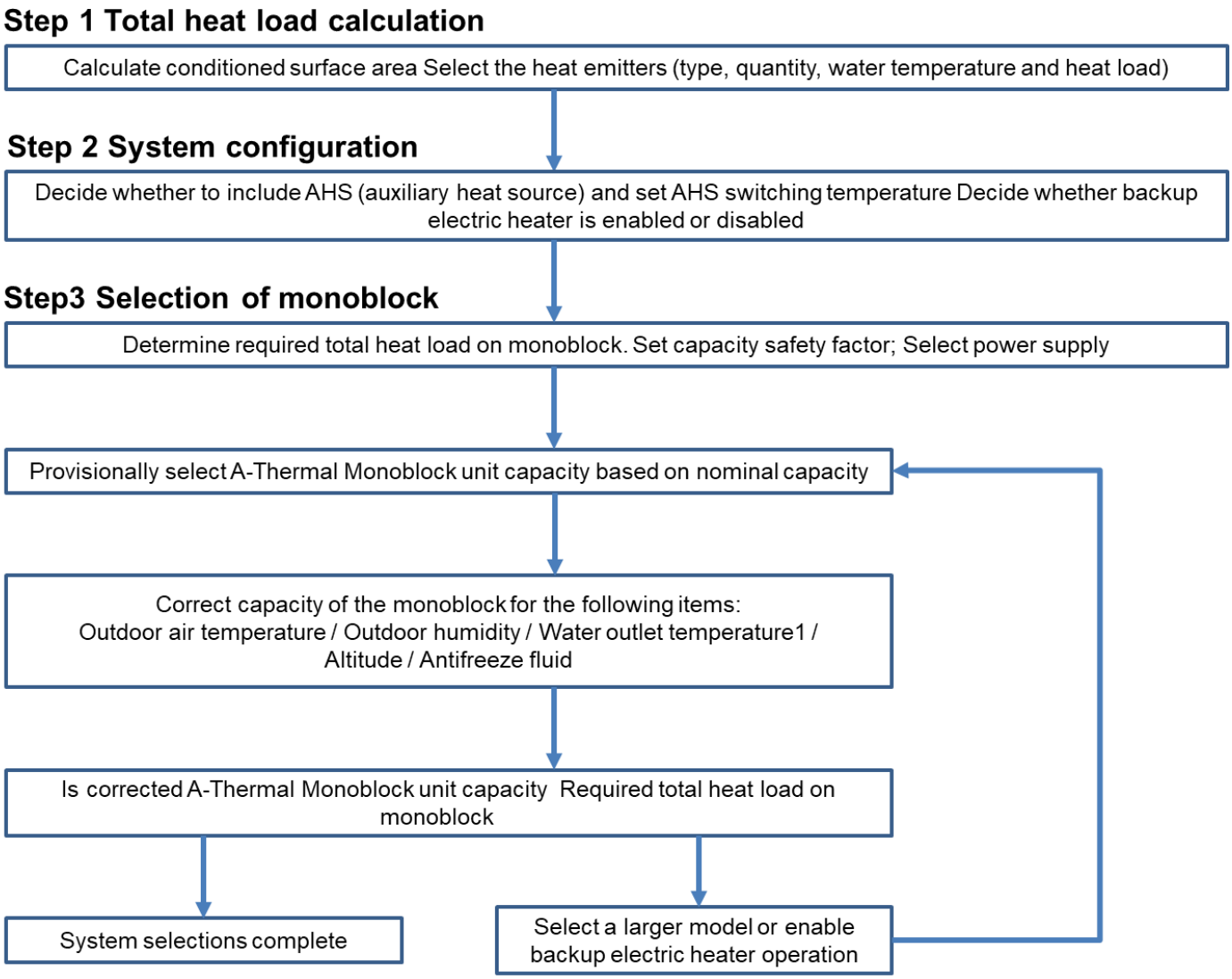

Notes:

1. If the required water temperatures of the heat emitters are not all the same, the A-Thermal outlet water temperature setting should be set at the highest of the heat emitter required water temperatures. If the water outlet design temperature falls between two temperatures listed in the Monoblock's capacity table, calculate the corrected capacity by interpolation.
2. If the Monoblock selection is to be based on total heating load and total cooling load, select Monoblock units which satisfy not only the total heating load requirements but also the total cooling load requirements.

1.4.2 Leaving Water Temperature (LWT) selection

The recommended design LWT ranges for different types of heat emitter are

- For floor heating: 30 to 35℃
- For fan coil units: 30 to 45℃
- For radiators: 40 to 50℃

The recommended design LWT ranges for different type of cooling emitter are

- For fan coil units: 7 to 18℃
- For floor cooling: 18 to 25℃

The recommended design water tank temperature for domestic hot water

- Water tank: 50 to 55℃

1.4.3 Selection of water tank (Procured locally by customers)

a. Based on experience, recommended values for the volume and heat exchanger of domestic hot water tank are shown in the table below.

Capacity(kW)	4-6kW	8-10kW	12~16kW
Water Tank Volume (L)	100~250	150~300	200~500
Minimum heat exchange area of Stainless steel coil (m^2)	1.4	1.4	1.6
Minimum heat exchange area of enamel coil (m^2)	2.0	2.0	2.5

b. Calculate the tank volume according to the formula.

(1) Consumption based on water consumption per capita.

Building type	Unit	Daily water consumption(L)	Design temperature (℃)
House	Per person, Per day	40~80	60
Villa	Per person, Per day	70~110	60

(2) Consumption based on sanitary utensils.

Utensils type	Daily water consumption(L)	DHW temperature(℃)
Bathtub, sprinkler system (with shower)	150	40
Bathtub, sprinkler system (without shower)	125	40
Shower	70~100	37~40
Wash basin	3	30

(3) Selection of the water tank

Selection of the water tank should consider the flow rate of the shower head, duration of use per person and daily water consumption.

$$\text{Value of the water tank} = \frac{\text{T(Design temperature)-T(Entering cold water temperature)}}{\text{T(Water tank temperature set point)-T(Entering cold water temperature)}} * \text{consumption}$$

$$= \alpha * \text{consumption}$$

T (Design temperature)：generally it is 60℃

T (Entering cold water temperature)：it differs for different regions

T (Water tank temperature set point)：it is the target heating temperature of the water tank

α：correction factor

Correction factor also use experience value according shower head and shower time.

Flow rate of the shower head (L/min) \ Duration of use (min/person)	10	15	20	25	30	40
4	0.48	0.71	0.94	1.18	1.42	1.89
6	0.71	1.06	1.42	1.77	2.12	2.83
8	0.95	1.42	1.89	2.36	2.83	3.77
10	1.18	1.77	2.36	2.95	3.54	4.72
16	1.76	2.65	3.54	4.42	5.31	7.08

1.4.4 Selection of water pump (Procured locally by customers)

➢ When the internal water pump does not meet the water flow requirements, the external water pump should be installed.

➢ If double zone control is required, water mixing pump should be installed.

➢ If need instant hot water, DHW pump should be installed.

➢ If want to realize solar hot water. Solar pump should be installed.

The following are some pump brands and models we recommend for reference only. Please choose according to your specific needs.

Type	Recommended Brand	Recommended model
External circulation pump	Grundfos	UPMM25-95
	Wilo	Para25/9
Floor heating mixing water pump	Grundfos	UPMM25-95
	Wilo	Para25/9
DHW water pump	Wilo	RS15/6
solar water pump	Wilo	Para25/8

1.4.5 Optimizing System Design

To get the most comfort with the lowest energy consumption with A-Thermal, it is important to take account of the following considerations:

➢ Choose heat emitters that allow the heat pump system to operate at as low a hot water temperature as possible whilst still providing sufficient heating.

➢ Make sure the correct weather dependency curve is selected to match the installation environment (building structure, climate) as well as users' demands.

➢ Connecting room thermostats (field supplied) to the hydraulic system helps prevent excessive space heating by stopping the Monoblock and circulating pump when the room temperature is above the thermostat set point

Part 2 Features

1. High energy efficiency

The energy efficiency is A+++ at the effluent temperature of 35℃ and 55℃

2. Low temperature operation capacity does not decay

The heating capacity of -7℃ does not decay, and the effluent temperature can be maintained at 80℃ at -10℃

3. Low noise

3m noise as low as 35 dB

4. Explosion-proof safety

Adopts sealed electric control box, sealed terminal and sealed valve to ensure safe operation

5. Parallel operation

Multi-unit parallel operation, the maximum capacity can reach 128kw, the number of domestic hot water units can be selected

6. Precise temperature control

--Double zone control

-- ECO curve User-defined

7. Easy maintenance

--APP control

--Remote monitoring

--One-click upgrade

Note：For more information，please refer to the product introduction PPT

Part 3 Piping System

3.1 Piping diagram

3.1.1 Monoblock Unit

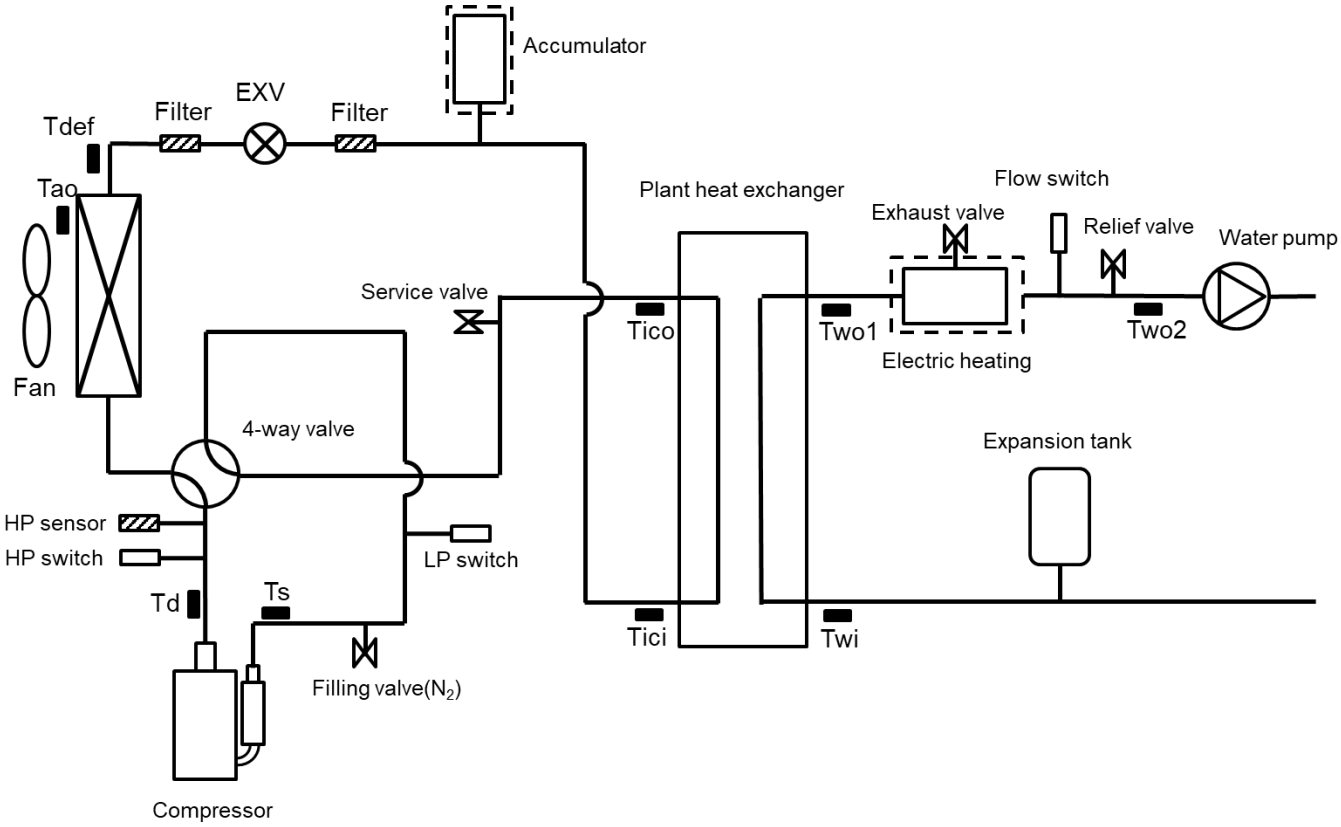

*Just 12-16kW unit has accumulator

*Units containing (NE) in the model number do not include electric heating

Code	Means	Code	Means
Td	Discharge temperature	Tico	Gas pipe temperature
Tao	Ambient temperature	Twi	Inlet water temperature
Tdef	Defrost temperature	Two1	Outlet water temperature1
Ts	Suction temperature	Two2	Outlet water temperature 2
Tici	Liquid pipe temperature		

3.1.2 A-Thermal system

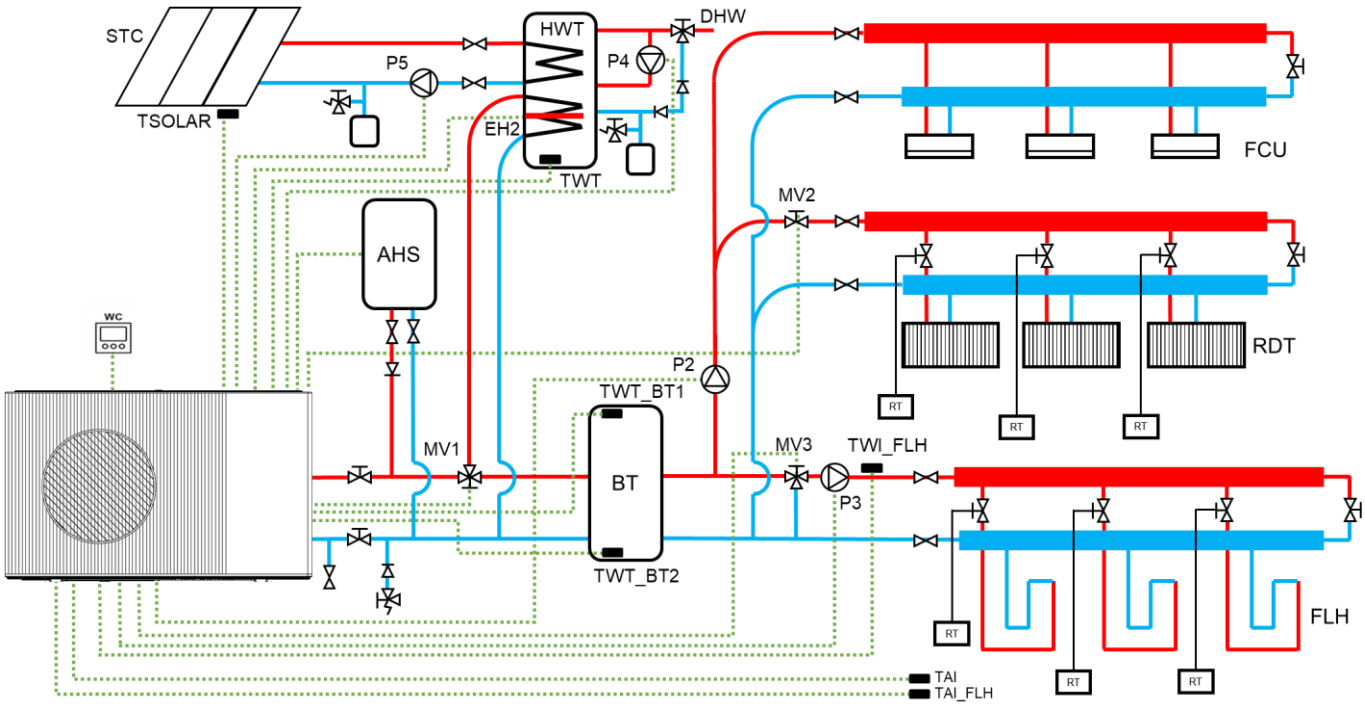

Code	Means	Code	Means
Tsolar	Solar panel temperature	MV2	Two-way valve for radiator and FCU
Twt	Domestic hot water tank temperature (DHW)	MV3	Under floor heating mix valve
Twt_BT1	Buffer tank temperature 1	EH2	DHW tank electric heater
Twt_BT2	Buffer tank temperature 2	WC	Wired controller
Twi_FLH	Floor heating inlet water temperature	HWT	DHW tank
Tai	Room temperature 1 (main zone)	STC	Solar panel
Tai_FLH	Room temperature 2 (second zone)	AHS	Gas boil
P2	External water pump	BT	Buffer tank
P3	Under floor heating mix pump	FLH	Floor heating
P4	DHW pump	RDT	Radiator
P5	Solar panel pump	FCU	Fan coil unit
MV1	Three-way valve for air conditioner and DHW	RT	Thermostat (user-supplied)

3.1.3 Parallel system

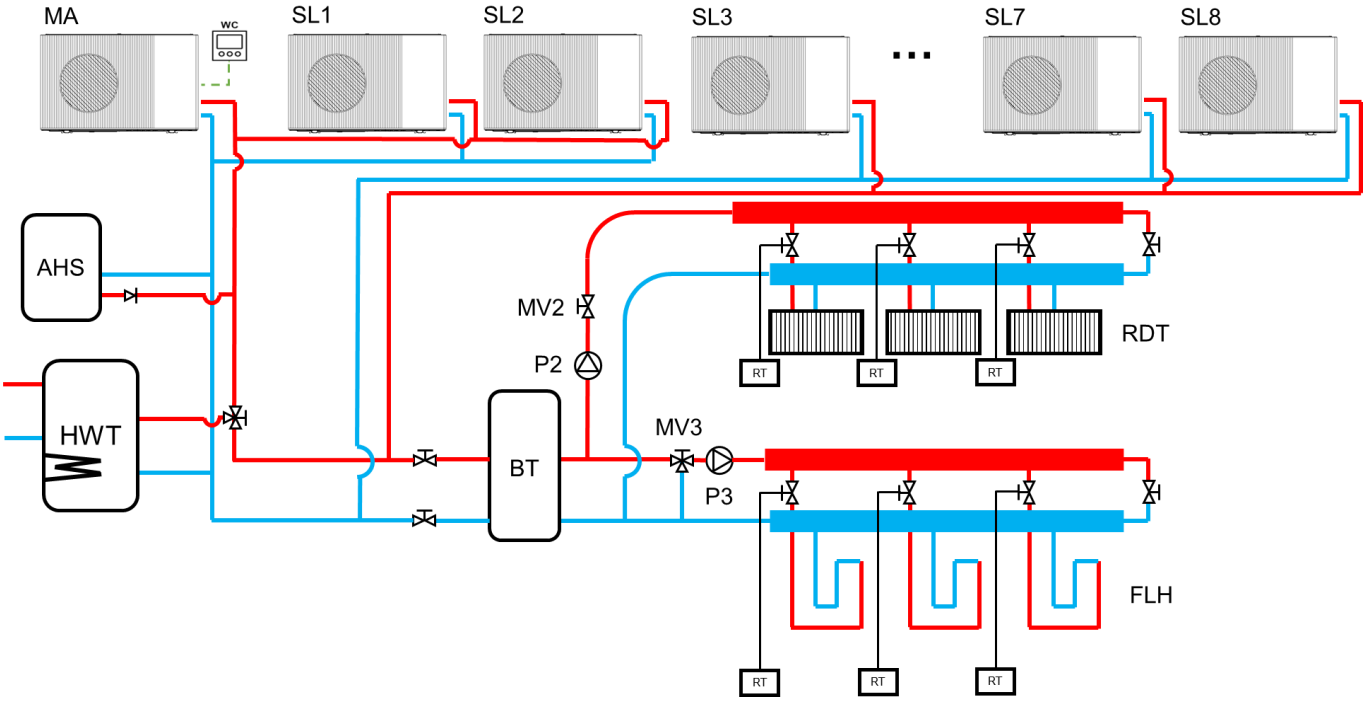

*Up to 8 units can be connected in parallel

*Up to 2 units can be work in DHW mode

Code	Means	Code	Means
MA	Master	HWT	DHW tank
SL	Slave	AHS	Gas boil
WC	Wired controller	BT	Buffer tank
P2	External water pump	FLH	Under floor heating
P3	Floor heating mix pump	RDT	Radiator
MV2	Two-way valve for radiator and FCU	RT	Thermostat (user-supplied)
MV3	Under floor heating mix valve		

3.2 System Configurations

R290 Monoblock Type Air Source heat pump unit can be configured to run with the electric heater either enabled or disabled and can also be used in conjunction with an auxiliary heat source such as a boiler.

The chosen configuration affects the size of heat pump that is required. Three typical configurations are described below.

Configuration 1: Heat pump only

- The heat pump covers the required capacity and no extra heating capacity is necessary.
- Requires selection of larger capacity heat pump and implies higher initial investment.
- Ideal for new construction in projects where energy efficiency is paramount

Configuration 2: Heat pump and backup electric heater

- Heat pump covers the required capacity until the ambient temperature drops below the point at which the heat pump is able to provide sufficient capacity. When the ambient temperature is below this equilibrium point, the backup electric heater supplies the required additional heating capacity
- Best balance between initial investment and running costs, results in lowest life cycle cost
- Ideal for new construction.

Configuration 3: Heat pump conjunction with auxiliary heat source

- Heat pump covers the required capacity until the ambient temperature drops below the point at which the heat pump is able to provide sufficient capacity. When the ambient temperature is below this equilibrium point, depending on the system settings, either the auxiliary heat source supplies the required additional heating capacity or the heat pump does not run and the auxiliary heat source covers the required capacity.
- Enables selection of lower capacity heat pump.
- Ideal for refurbishments and upgrades.

System configurations

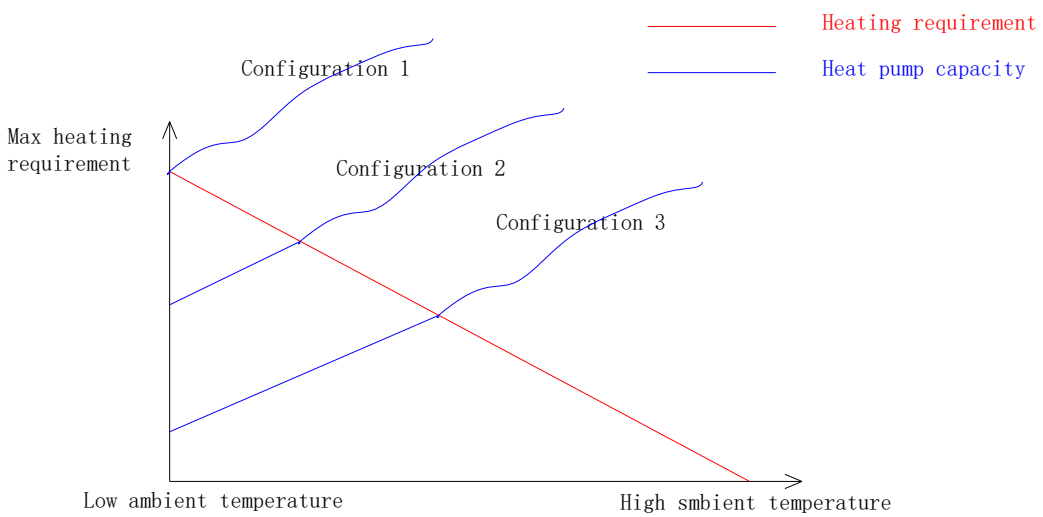

3.3 Typical Applications

3.3.1 Space Heating Only

The room thermostat is used as a switch. When there is a heating request from the room thermostat, the unit operates to achieve the target water temperature set on the Wired controller. When the room temperature reaches the thermostats set temperature, the unit stops.

When the heating terminal uses floor heating and Heating radiator at the same time, the two ends of the floor heating and low temperature radiator require different working water temperatures. In order to meet these two different working water temperatures at the same time, it is necessary to install a mixing valve and a mixing water pump at the inlet and outlet of the floor heating, the outlet water temperature of the unit is set to the water temperature required by the heating radiator, and the water mixing valve and water mixing pump are set to reduce the inlet water temperature of the floor heating.

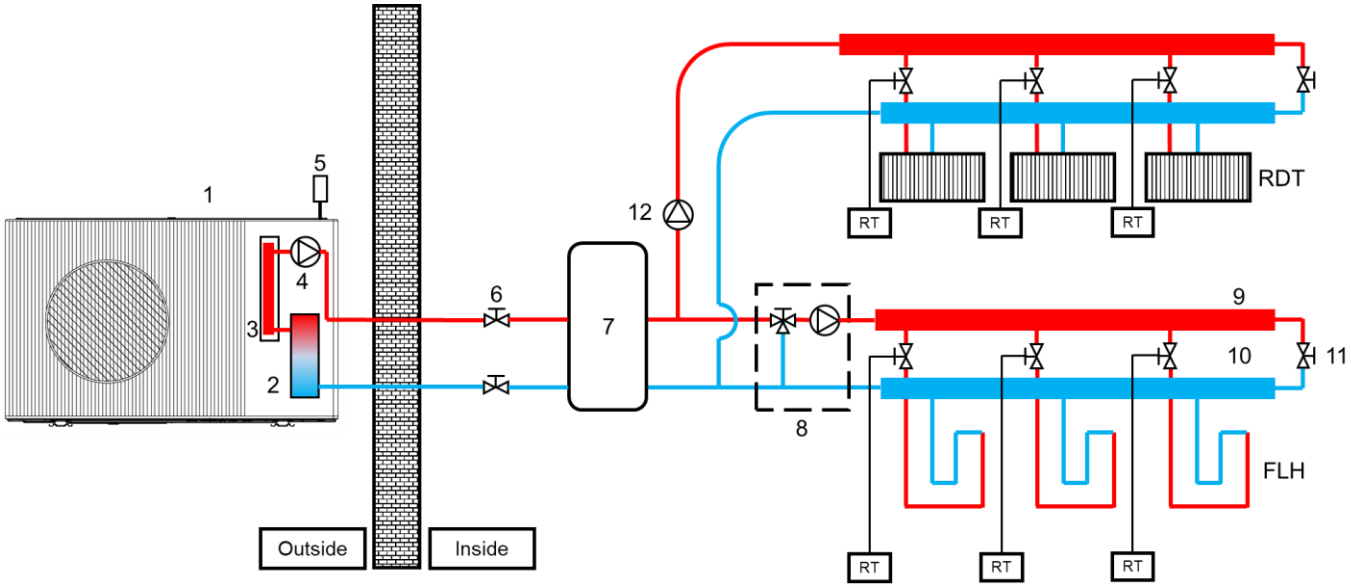

REMARK			
1	Monoblock	9	Distributor
2	Plate heat exchanger	10	Distributor
3	Backup electric heater(optional)	11	Bypass valve
4	Internal circulating pump	12	External circulation pump
5	Wired controller	RDT	Heating radiator
6	Stop valve (local)	FLH	Floor heating
7	Buffer tank	RT	Room thermostats
8	Mixing valve and mixing water pump		

3.3.2 Space Heating and Domestic Hot Water

The room thermostats also can connect to a motorized valve. Each rooms temperature is regulated by the motorized valve on its water circuit. Domestic hot water is supplied from the domestic hot water tank connected to the monoblock. The water tank should build in a temperature sensor which connect to the monoblock. A bypass valve is required

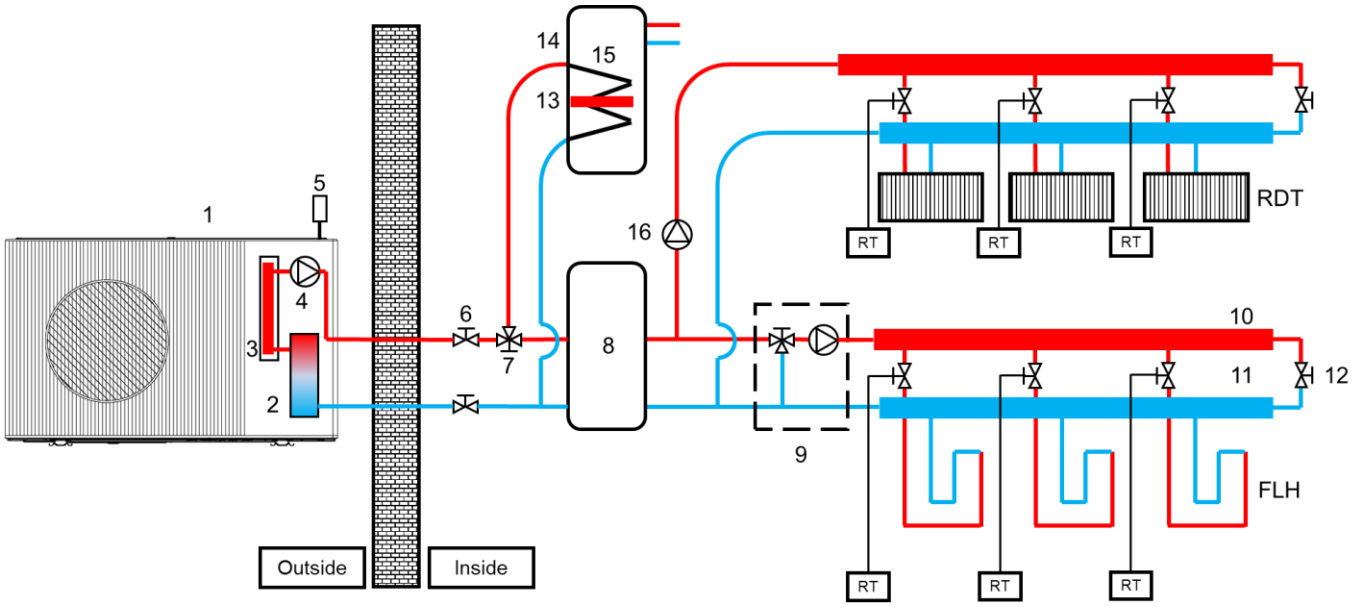

REMARK			
1	Monoblock	11	Distributor
2	Plate heat exchanger	12	Bypass valve
3	Backup electric heater(optional)	13	Electric heating
4	Internal circulating pump	14	Domestic hot water tank
5	Wired controller	15	Coil in the water tank
6	Stop valve (field supplied)	16	External circulation pump
7	Motorized 3way valve	RDT	Heating Radiator
8	Buffer tank	FLH	Floor heating
9	Mixing valve and mixing water pump	RT	Room thermostats
10	Distributor		

3.3.3 Space Heating, Space Cooling and Domestic Hot Water

Floor heating loops & Heating radiator & Fan coil units are used for space heating; fan coil units are used for space cooling. Domestic hot water is supplied from the domestic hot water tank connected to the hydraulic module. The unit switches to heating or cooling mode according to the temperature detected by the room thermostat. In space cooling mode, the 2way valve is closed to prevent cold water entering the radiator.

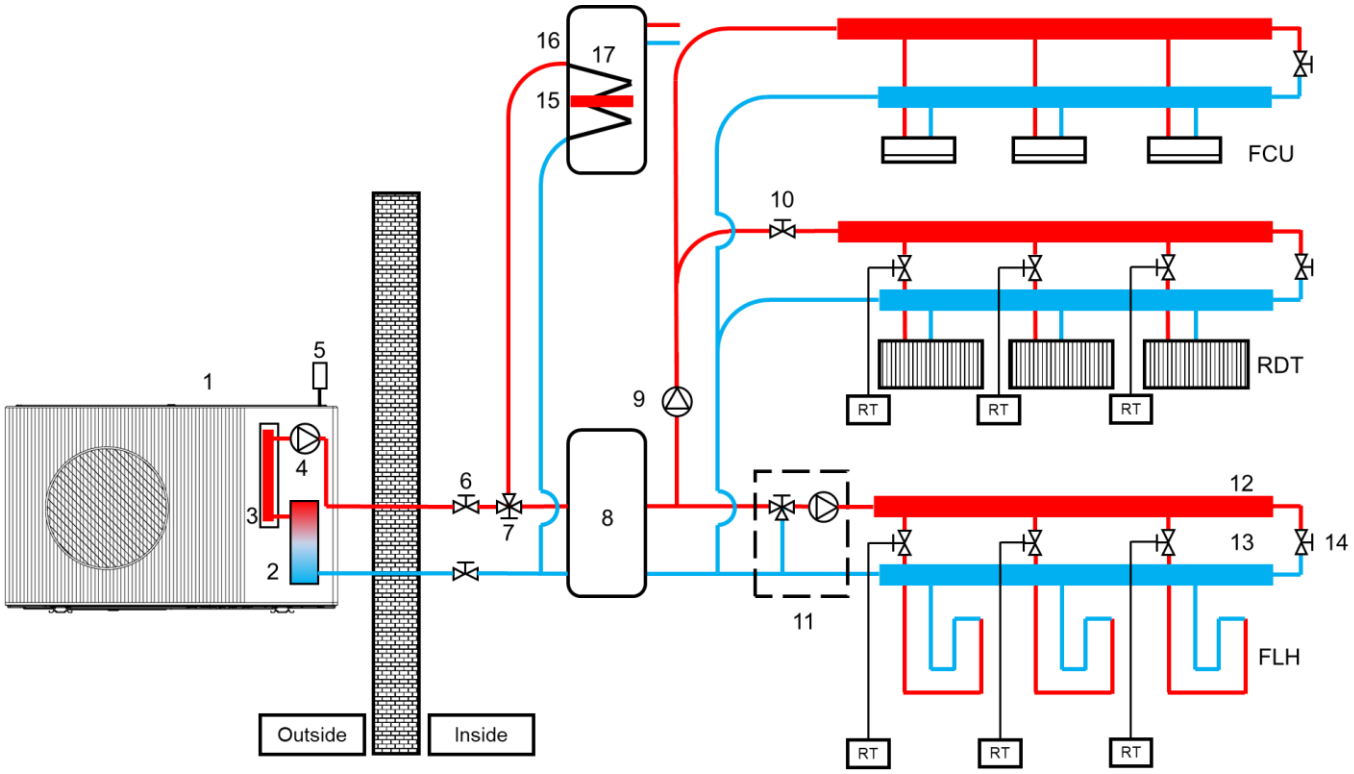

REMARK			
1	Monoblock	12	Distributor
2	Plate heater exchange	13	Distributor
3	Backup electric heater(optional)	14	Bypass valve
4	Internal circulating pump	15	Electric heating
5	Wired controller	16	Domestic hot water tank
6	Stop valve	17	Coil in the water tank
7	Motorized 3way valve	RDT	Heating Radiator
8	Buffer tank	FLH	Floor heating
9	External circulation pump	FCU	Fan coil units
10	Two way valve	RT	Room thermostats
11	Mixing valve and mixing water pump		

3.3.4 Space Heating and Space Cooling

Floor heating loops & Heating radiator & fan coil units are used for space heating; fan coil units are used for space cooling. In space cooling mode, the 2way valve is closed to prevent cold water entering the radiator.

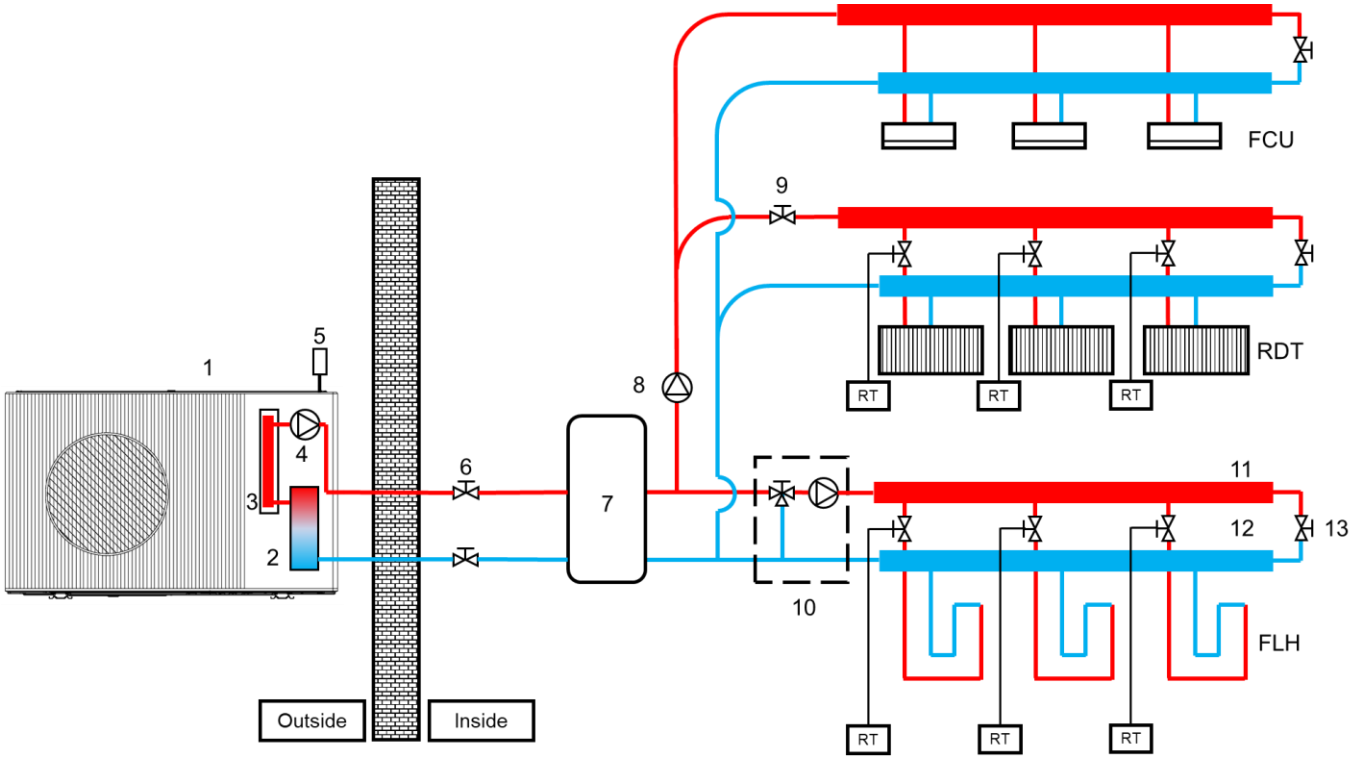

Remark			
1	Monoblock	10	Mixing valve and mixing water pump
2	Plate heater exchange	11	Distributor
3	Backup electric heater(optional)	12	Distributor
4	Internal circulating pump	13	Bypass valve
5	Wired controller	RDT	Radiator
6	Stop valve	FLH	Floor heating
7	Buffer tank	FCU	Fan coil units
8	External circulation pump	RT	Room thermostats
9	Two way valve		

3.3.5 Auxiliary heat source provides space heating only

Users can also use only gas water heaters for heating

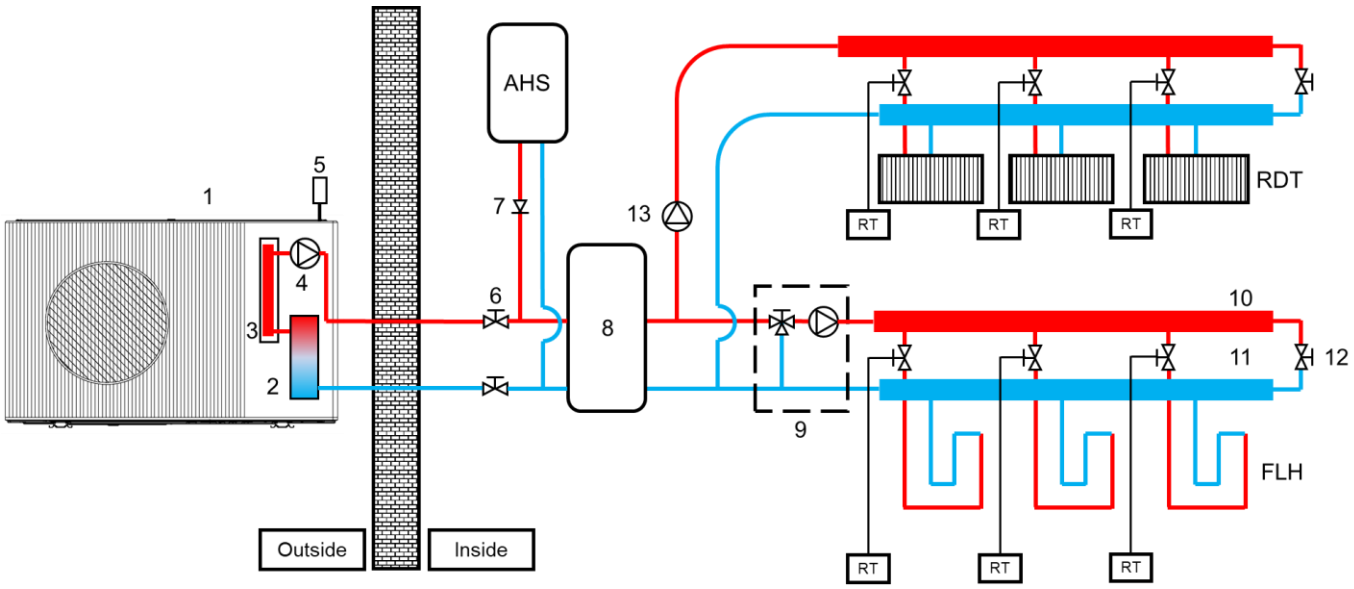

REMARK			
1	Monoblock	10	Distributor
2	Plate heater exchange	11	Distributor
3	Backup electric heater(optional)	12	Bypass valve
4	Internal circulating pump	13	External circulation pump
5	Wired controller	RDT	Heating Radiator
6	Stop valve	FLH	Floor heating
7	One way valve	AHS	Auxiliary heating source
8	Buffer tank	RT	Room thermostats
9	Mixing valve and mixing water pump		

3.3.6 Space Heating Through Floor Heating Loops and Fan Coil Units

The floor heating loops and fan coil units require different operating water temperatures. To achieve these two set points, a mixing station is required. Room thermostats for each zone are optional.

The outlet water temperature of the unit is set to the water temperature required by the fan coil unit, and the mixing valve and mixing pump are set to reduce the inlet water temperature of the floor heating

Figure 3.3.6: Space heating through floor heating loops and fan coil units

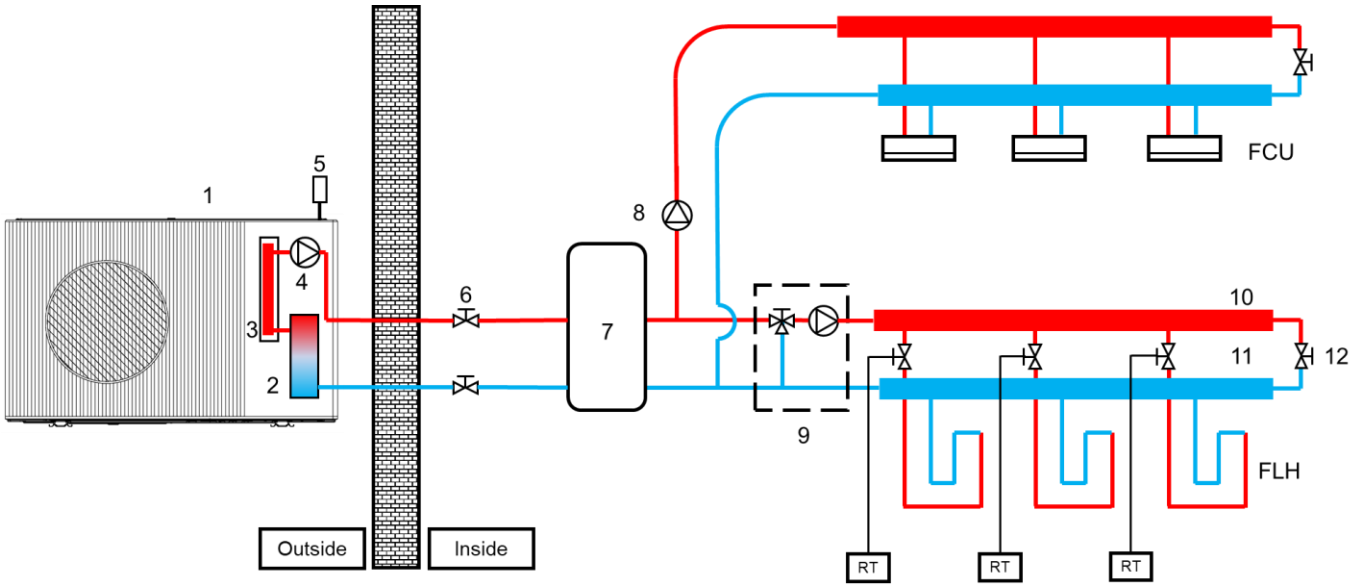

REMARK			
1	Monoblock	9	Mixing valve and mixing water pump
2	Plate heater exchange	10	Distributor
3	Backup electric heater(optional)	11	Distributor
4	Internal circulating pump	12	Bypass valve
5	Wired controller	FCU	Fan coil units
6	Stop valve	FLH	Floor heating
7	Buffer tank	RT	Room thermostats
8	External circulation pump		

3.3.7 Space Heating, Space Cooling and Domestic Hot Water Compatible with Solar Water Heater

Floor heating loops & Heating Radiator &fan coil units are used for space heating, and fan coil units are used for space cooling. The temperature in the domestic hot water tank is controlled by the monoblock. A temperature sensor needs to be placed in the domestic hot water tank and connected to the monoblock. When it is detected that the temperature of the domestic hot water tank is lower than the set temperature and meets the requirements for solar hot water activation When conditions are met, turn on the solar water pump to realize the solar hot water function.

Figure 3.3.7 Space heating, space cooling and domestic hot water compatible with solar water heater

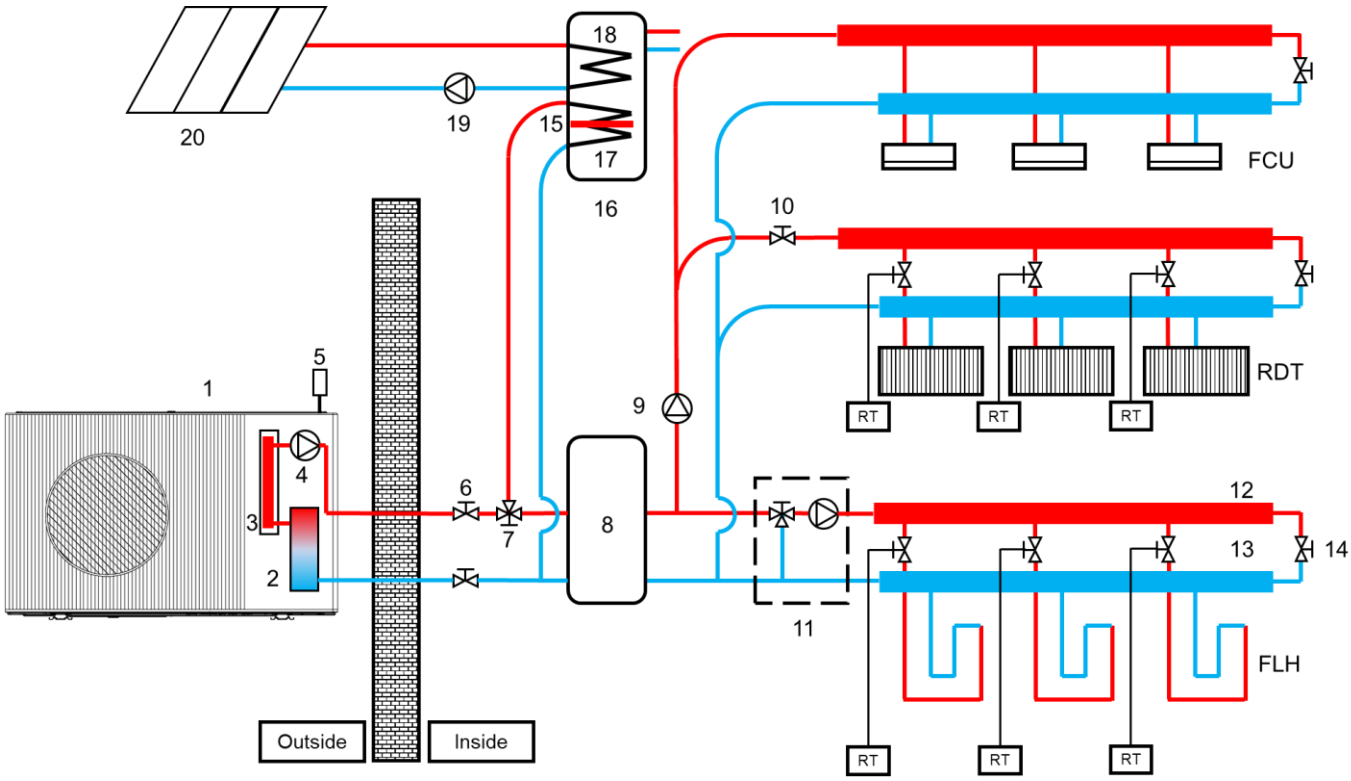

REMARK			
1	Monoblock	13	Distributor
2	Plate heater exchange	14	Bypass valve
3	Backup electric heater(optional)	15	Electric heating
4	Internal circulating pump	16	Domestic hot water tank
5	Wired controller	17	Coil 1 in the water tank
6	Stop valve	18	Coil 2 in the water tank
7	Motorized 3way valve	19	solar water pump
8	Buffer tank	20	Solar panel
9	External circulation pump	RDT	Heating Radiator
10	Two way valve	FLH	Floor heating
11	Mixing valve and mixing water pump	FCU	Fan coil units
12	Distributor	RT	Room thermostats

3.3.8 Space Heating with heat pump and AHS, space cooling with heat pump and solar for hot water

When the heating insufficient, the gas boiler (AHS) is used as an additional heat source, and floor heating or fan coils or low temperature radiators are used for space heating (also can be used in combination with various types of terminals), The fan coil is used for space cooling. The temperature in the domestic hot water tank is controlled by the Monoblock. A temperature sensor needs to be placed in the domestic hot water tank and connected to the Monoblock. When it is detected that the temperature of the domestic hot water tank is lower than the set temperature and meets the requirements for solar hot water activation When conditions are met, turn on the solar water pump to realize the solar hot water function.

Figure 3.3.8Space Heating with heat pump and AHS, space cooling with heat pump and solar for hot water

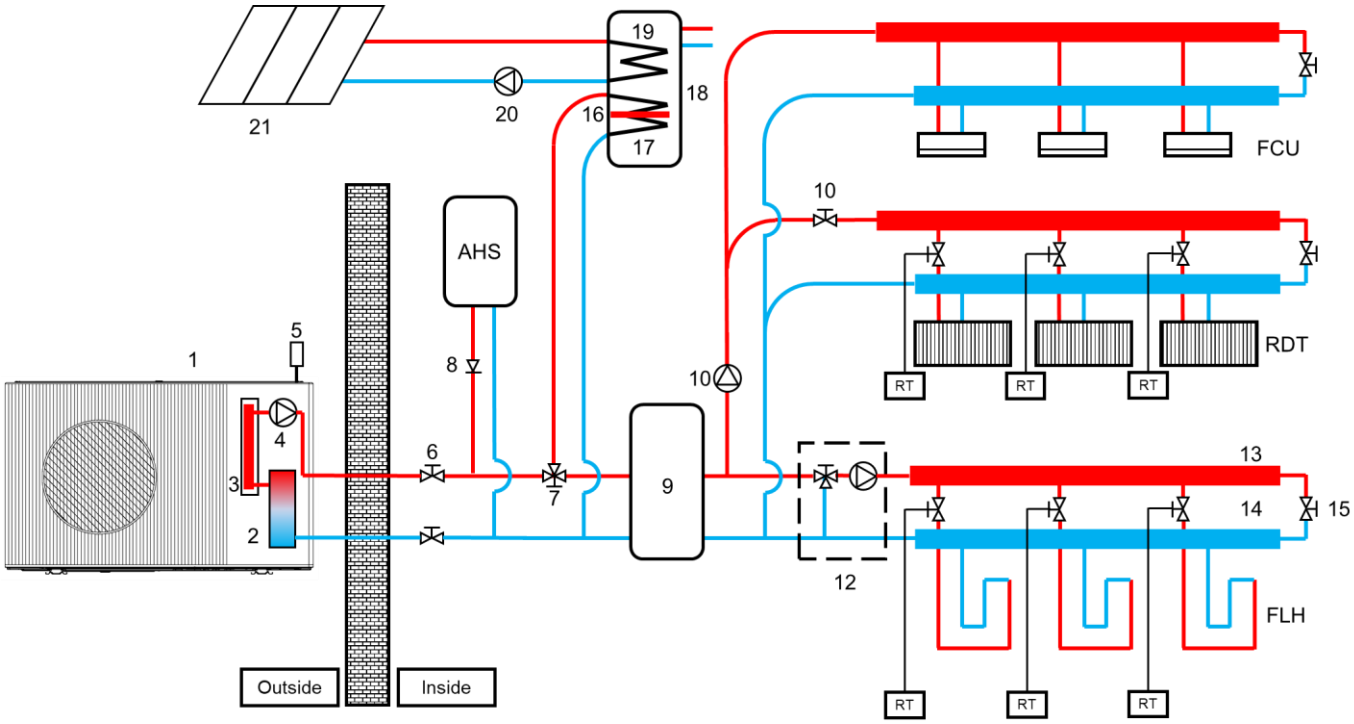

REMARK			
1	Monoblock	14	Distributor
2	Plate heater exchange	15	Bypass valve
3	Backup electric heater(optional)	16	Electric heating
4	Internal circulating pump	17	Domestic hot water tank
5	Wired controller	18	Coil 1 in the water tank
6	Stop valve	19	Coil 2 in the water tank
7	Motorized 3way valve	20	solar water pump
8	One way valve	21	Solar panel
9	Buffer tank	RDT	Radiator
10	External circulation pump	FLH	Floor heating
11	One way valve	FCU	Fan coil units
12	Mixing valve and mixing water pump	RT	Room thermostats
13	Distributor		

Note:
Buffer tank volume requirement
For 4-6KW, buffer tank volume ≥ 25L
For 8-16KW, buffer tank volume ≥ 40L

Part 4 Layout of Functional Components

4.1 Monoblock

Take the 12~16kW(3-phase) for example

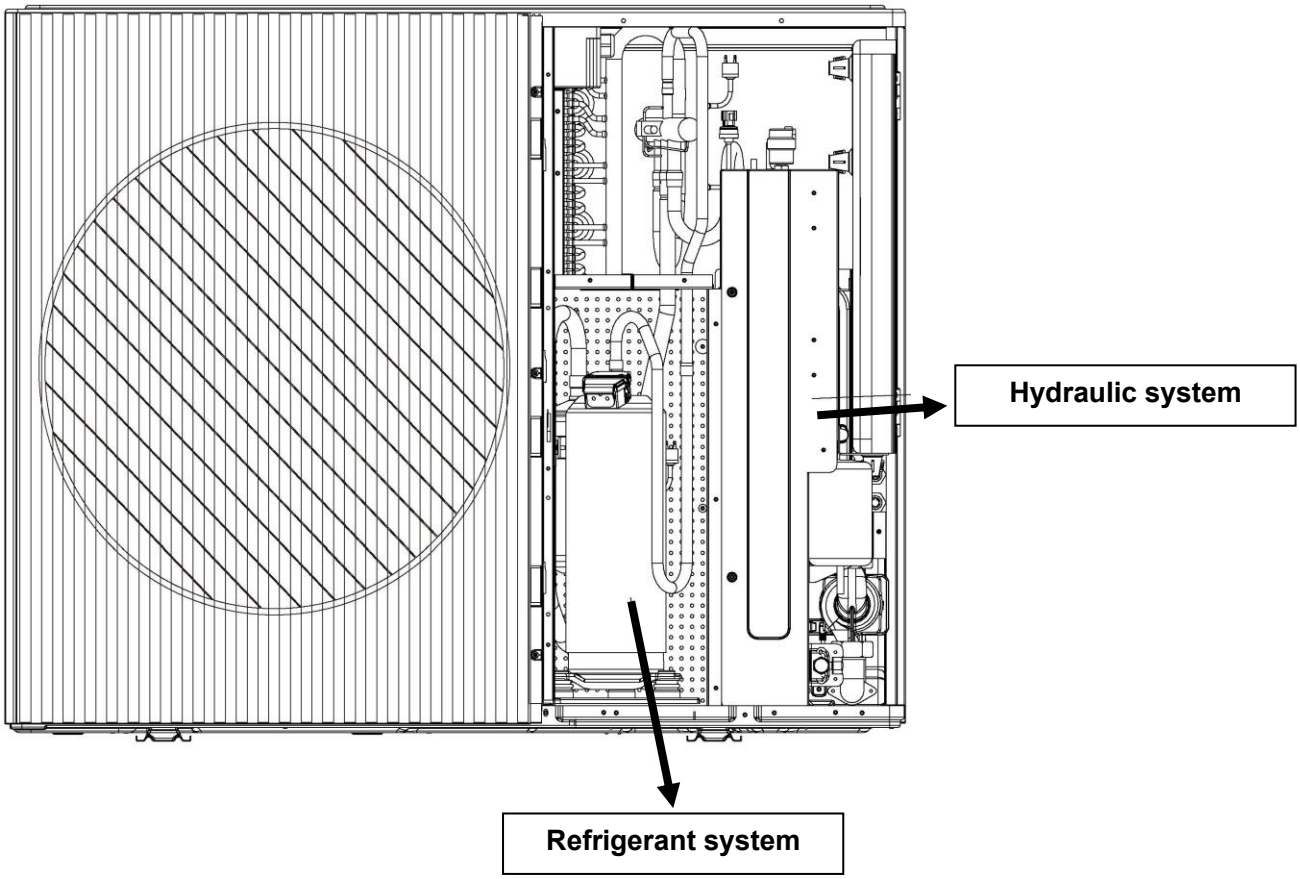

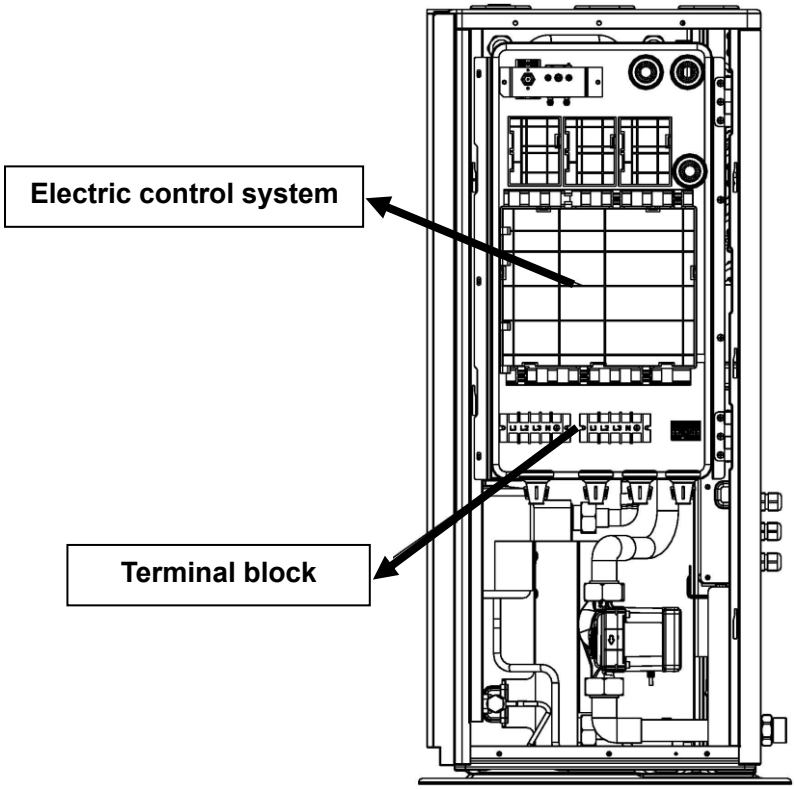

4kW-6kW

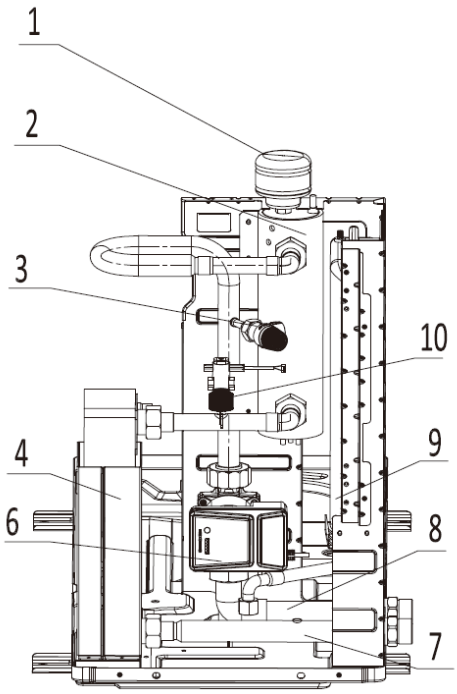

8kW-16kW

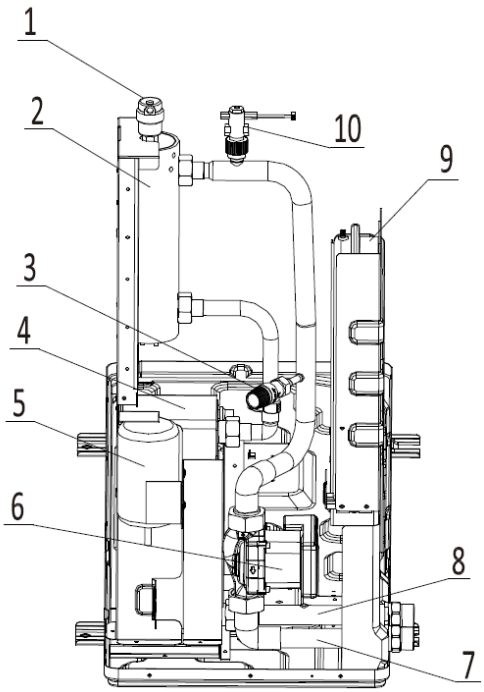

With backup heater for example (optional)

NO.	Assembly	Explanation
1	Automatic air purge valve	Remaining air in the water circuit will be automatically removed via the automatic air purge valve.
2	Internal backup beater	The backup heater consists of an electrical heating element that will provide additional heating capacity to the water circuit if the heating capacity of the unit is not sufficient due to low outdoor temperature, it also protects the external water piping from freezing during cold periods.
3	Pressure relief valve	The pressure relief valve prevent excessive water pressure in the water circuit by opening at 43.5 psi(g)/0.3Mpa(g) and discharging some water.
4	Plate heat exchanger	Heat exchanging between water and refrigerant.
5	Accumulator	Only 12kW-16kW.
6	Water pump	The pump circulates the water in the water circuit.
7	Water outlet pipe	/
8	Water inlet pipe	/
9	Expansion vessel(5L)	/
10	Flow switch	If water flow is below 0.60m3/h, the flow switch open(8kW~16kW) If water flow is below 0.36m3/h, the flow switch open(4kW-6kW)

Part 5 Dimension

5.1 External dimension

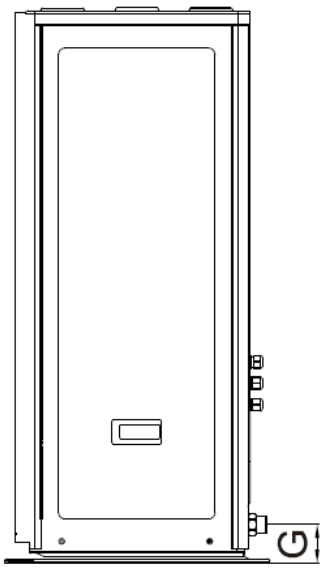

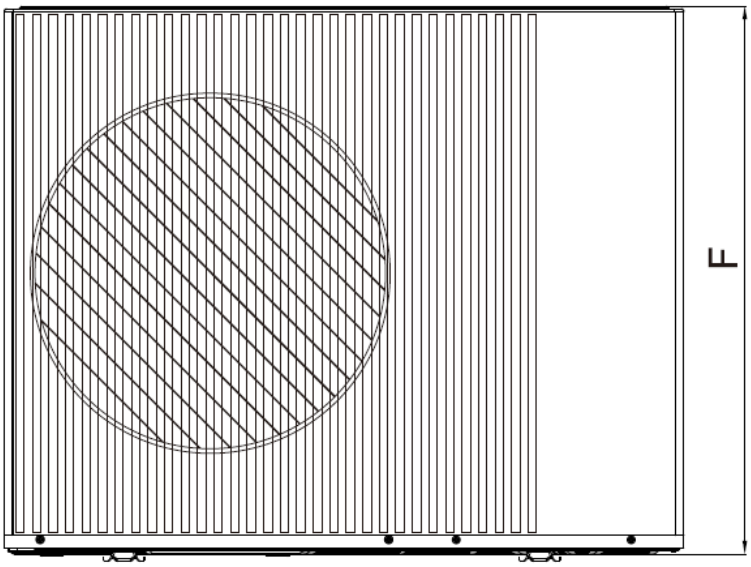

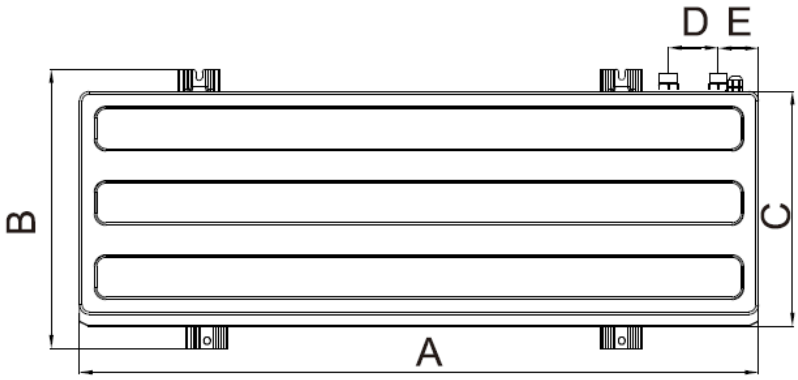

Model	A	B	C	D	E	F	G
4/6kW	1130	500	450	102	116	710	67
8-16kW	1280	500	450	94	81	1040	72

Unit: mm

5.2 Barycenter

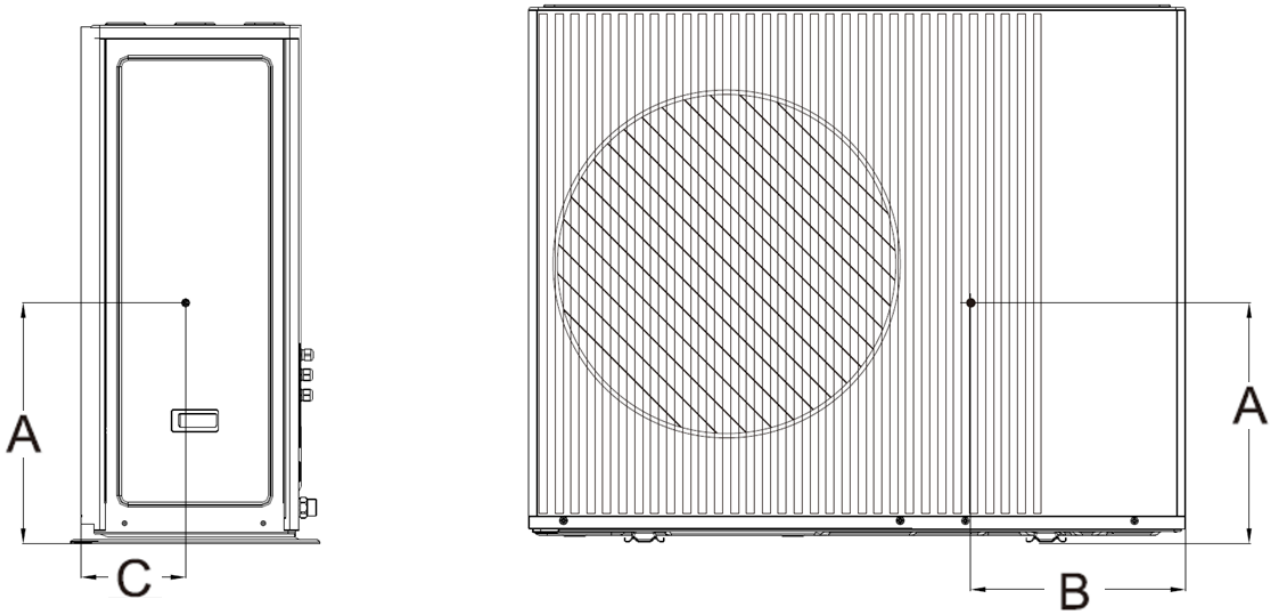

Model	A	B	C
4/6kW	300	400	180
8/10kW	550	480	280
12/14/16kW	500	470	245

Unit: mm

Part 6 Electrical Principle Diagram

6.1 4-16kW(1-Phase)

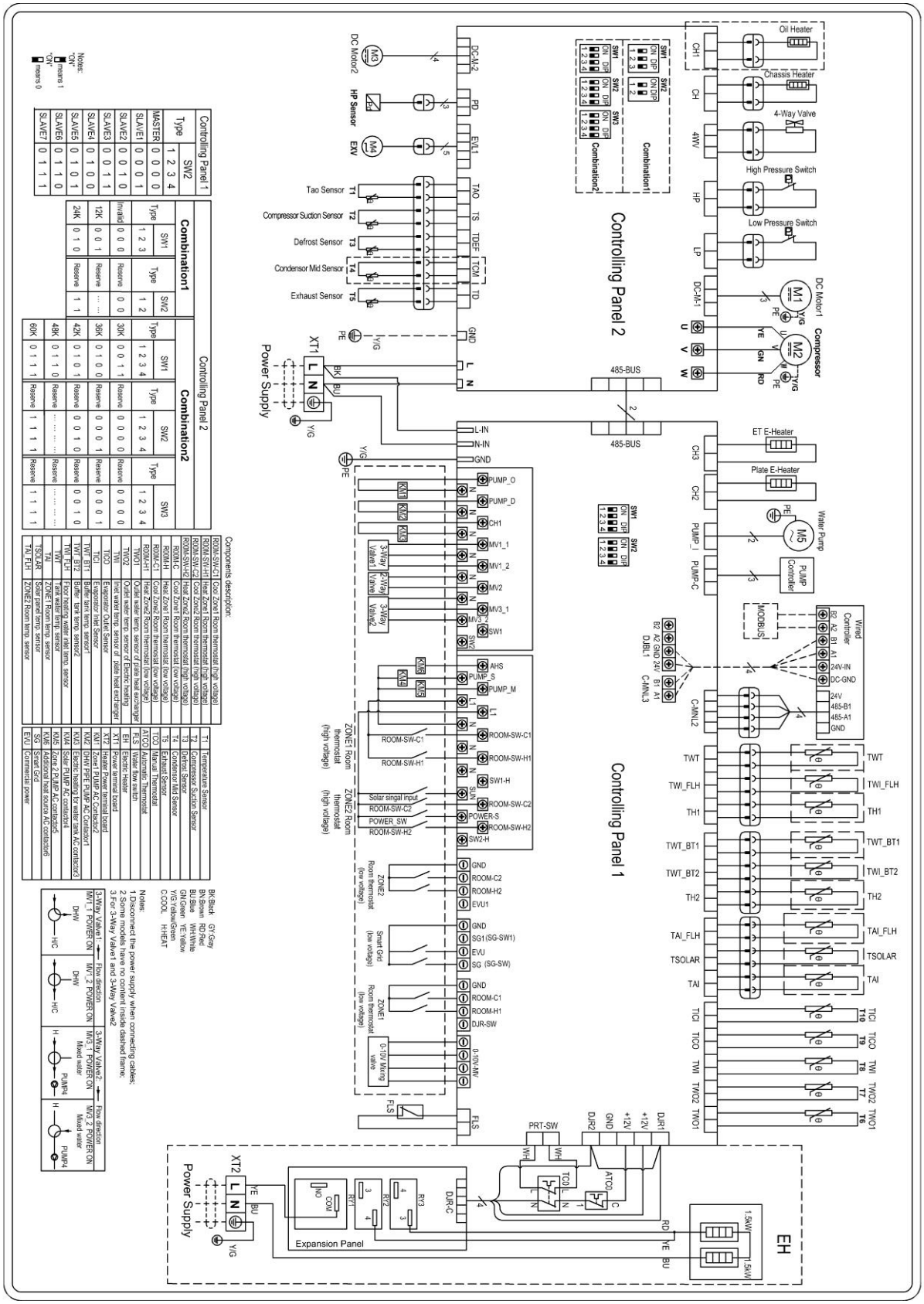

6.2 8-16kW(3-Phases)

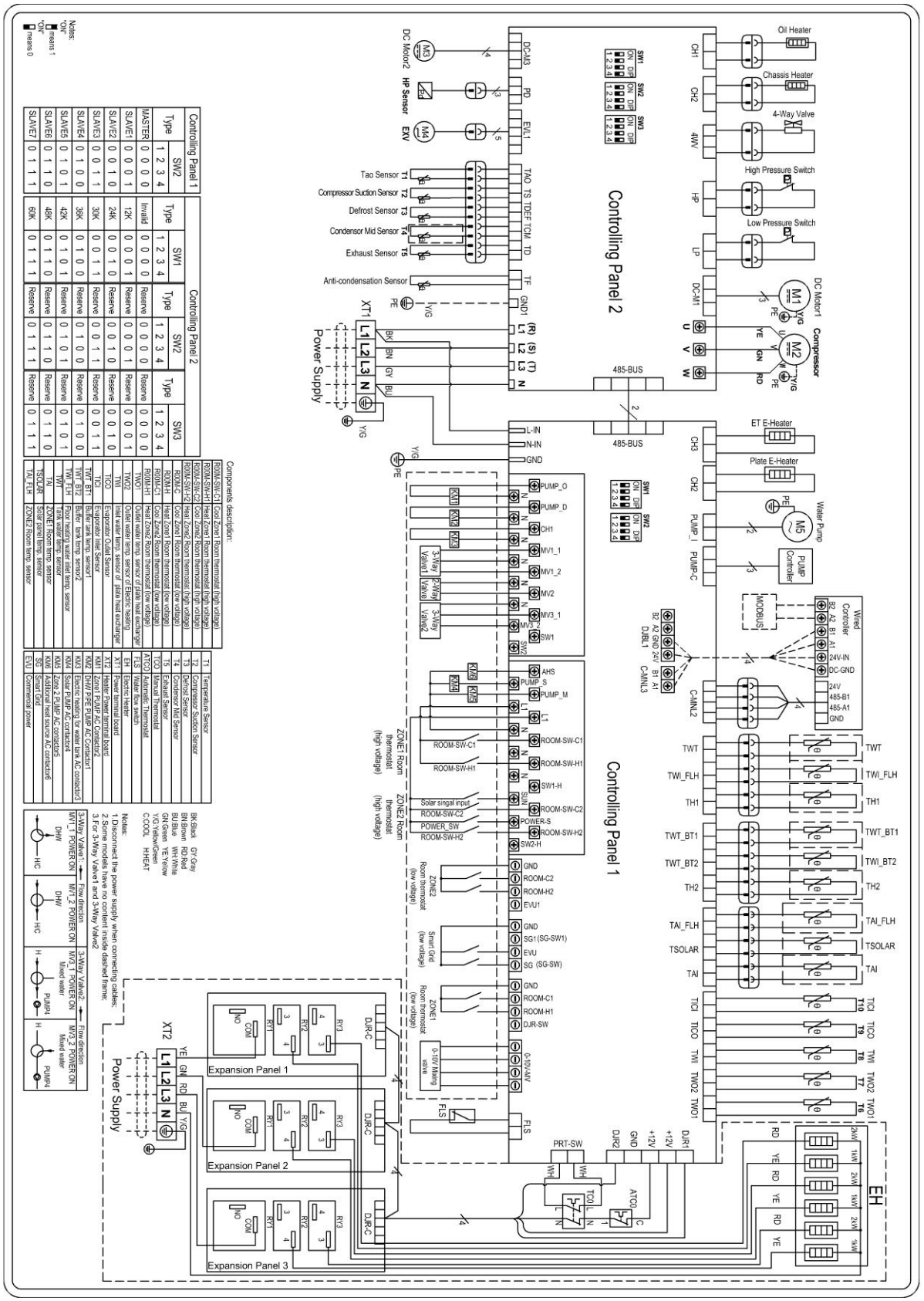

Part 7 Capacity Amendment

7.1 Operating Limits

7.1.1 Heating operating limits

In heating mode, the water flowing temperature (Two2) range in different outdoor temperature (Ta) is listed below;

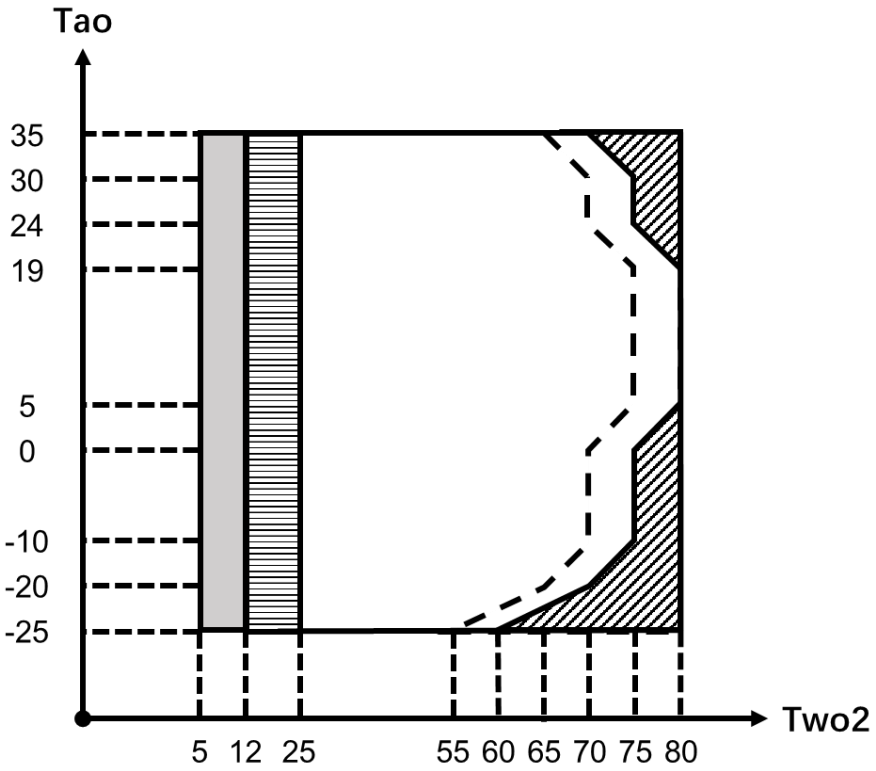

If IBH/AHS setting is valid. Only IBH/AHS turns on.

If IBH/AHS setting is invalid, only heat pump turns on; limitation and protection may occur during heat pump operation.

Operation range by heat pump with possible limitation and protection. Heat pump turns off only IBH/AHS turns on.

Maximum inlet water temperature line for heat pump operation.

7.1.2 Cooling operating limits

In cooling mode, the water flowing temperature (Two2) range indifferent outdoor temperature (Tao) is listed below:

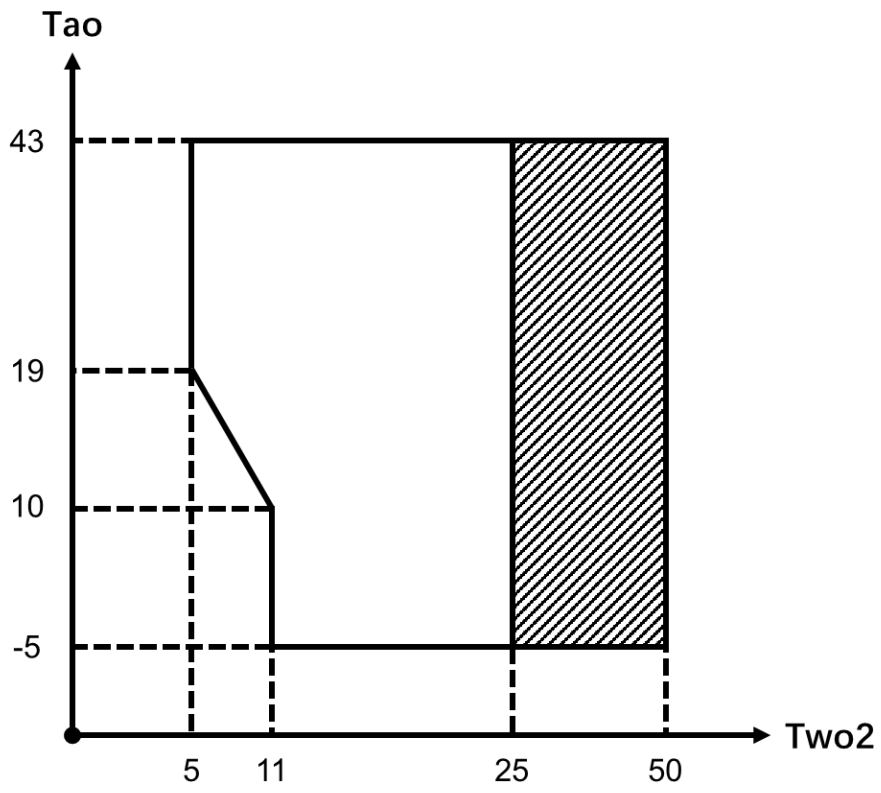

Operation range by heat pump with possible limitation and protection.

7.1.3 Domestic hot water operating limits

In DHW mode, the water flowing temperature (Two2) range in different outdoor temperature (Ta) is listed below:

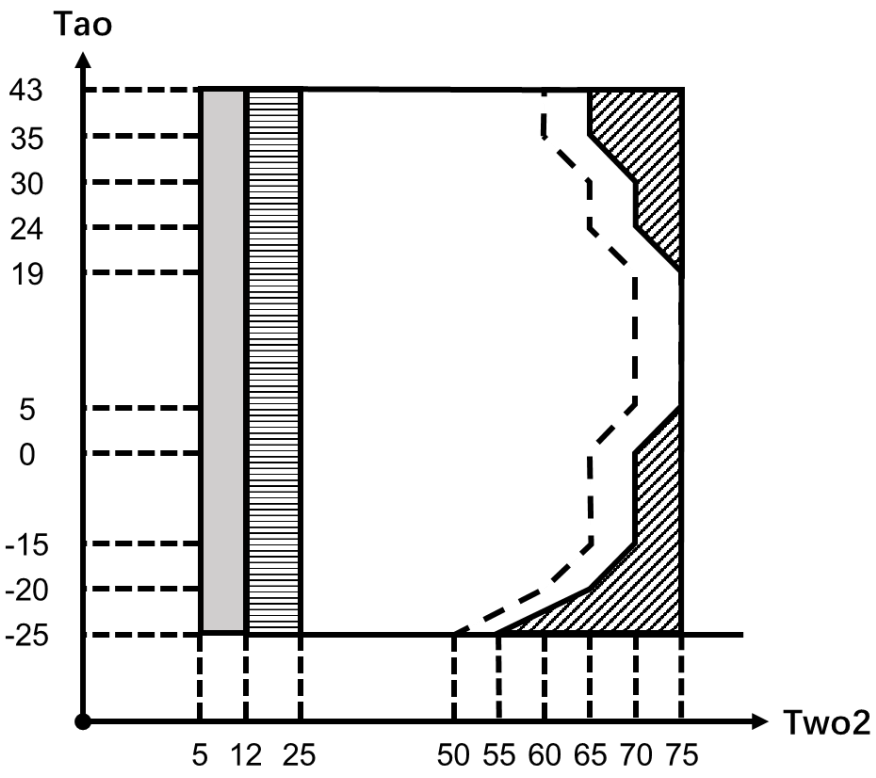

If IBH/AHS setting is valid. Only IBH/AHS turns on.

If IBH/AHS setting is invalid, only heat pump turns on; limitation and protection may occur during heat pump operation.

Operation range by heat pump with possible limitation and protection. Heat pump turns off only IBH/AHS turns on.

Maximum inlet water temperature line for heat pump operation.

Note：please refer to the Capacity table for more information

Part 8 Hydraulic Performance

Water pump type：APM25-9-130 PWM1(S)

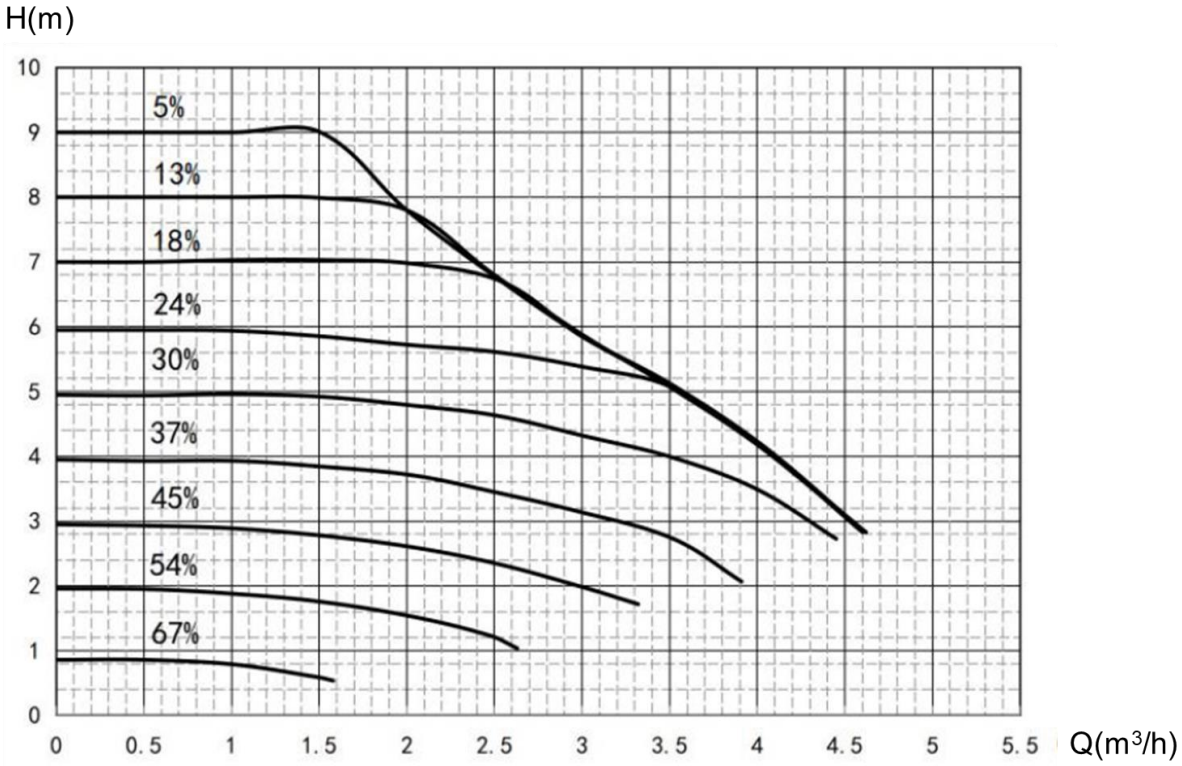

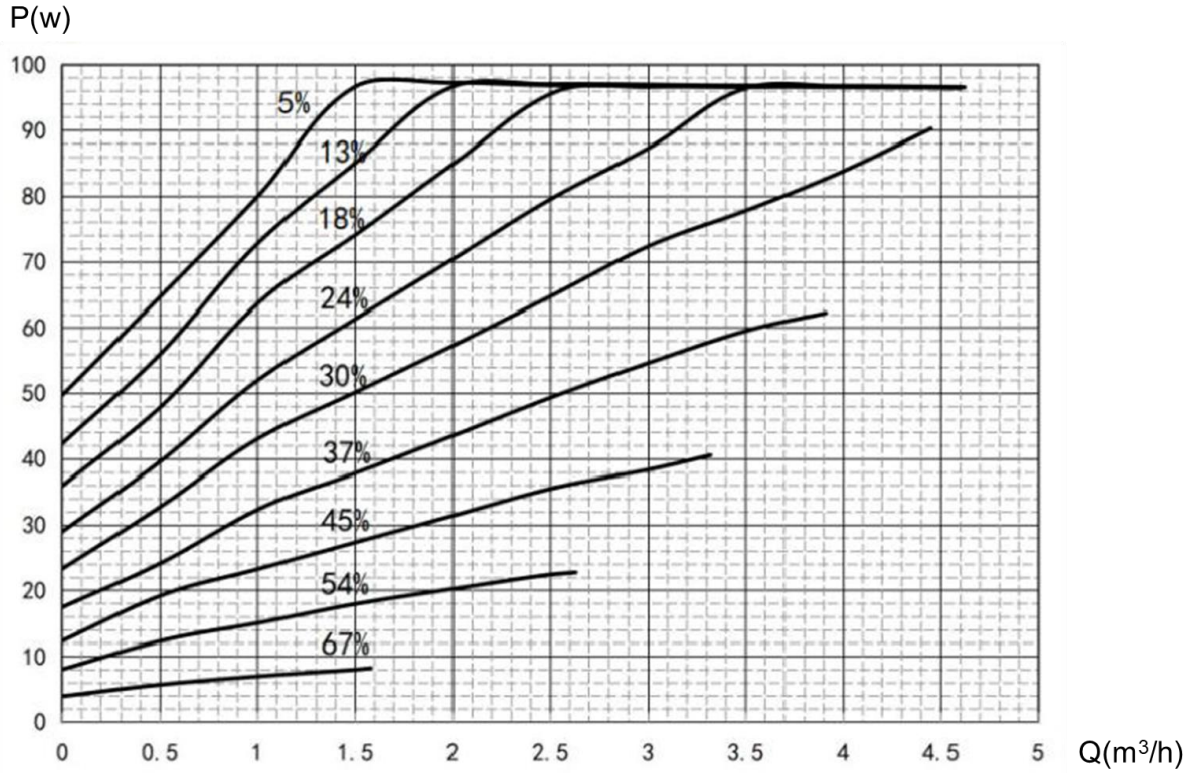

Part 9 Sound Levels

9.1 Monoblock sound pressure level

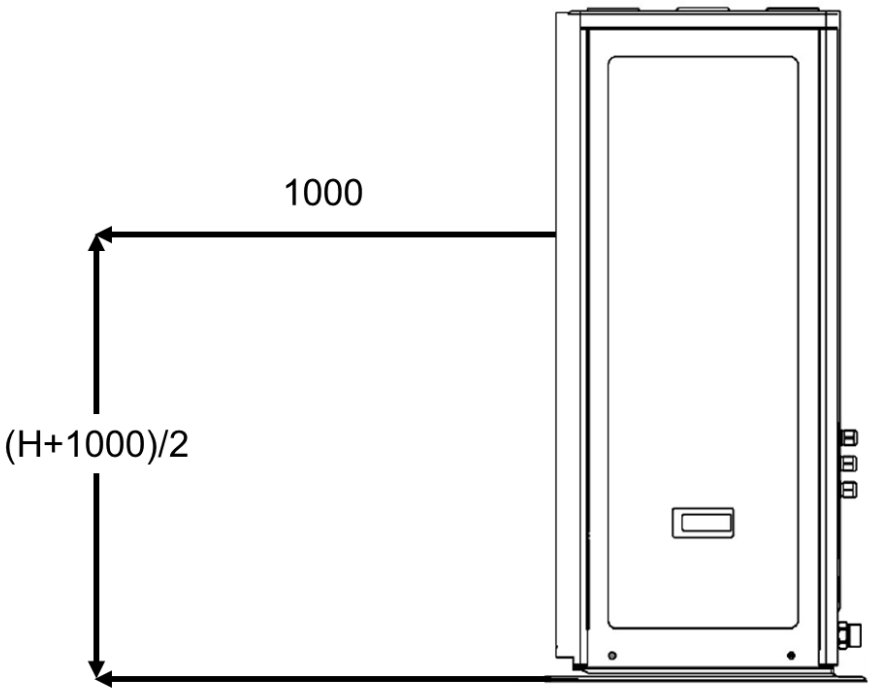

Monoblock sound pressure level measurement (unit: mm)

Models	dB
ACHP-H04/4R2HA-M ACHP-H04/4R2HA-M(NE)	56
ACHP-H06/4R2HA-M ACHP-H06/4R2HA-M(NE)	56
ACHP-H08/4R2HA-M ACHP-H08/5R2HA-M ACHP-H08/4R2HA-M(NE)	57
ACHP-H10/4R2HA-M ACHP-H10/5R2HA-M ACHP-H10/4R2HA-M(NE)	57
ACHP-H12/4R2HA-M ACHP-H12/5R2HA-M ACHP-H12/4R2HA-M(NE) ACHP-H12/5R2HA-M(NE)	58
ACHP-H14/4R2HA-M ACHP-H14/5R2HA-M ACHP-H14/4R2HA-M(NE) ACHP-H14/5R2HA-M(NE)	59
ACHP-H16/4R2HA-M ACHP-H16/5R2HA-M ACHP-H16/4R2HA-M(NE) ACHP-H16/5R2HA-M(NE)	60

Notes

1.Sound pressure level is measured at a position1m in front of the unit and (1000+H)/2, (where H is the

height of the unit) above the floor in a semi an-echoic chamber. During actual operation, sound pressure levels may be higher as a result of ambient noise.

2. Outdoor air temperature：dry bulb7℃. Wet bulb 6℃;EWT30℃,LWT35℃.

3. Outdoor air temperature：dry bulb 7℃ Wet bulb 6℃; EWT 40℃, LWT 45℃.

4. Outdoor air temperature：dry bulb 7℃ Wet bulb 6℃; EWT 47℃,LWT 55℃.

5. Sound pressure level is the maximum value tested under the three conditions of Notes2, Notes3 and Notes4.

9.2 Monoblock Octave band levels

ACHP-H04/4R2HA-M; ACHP-H04/4R2HA-M(NE)

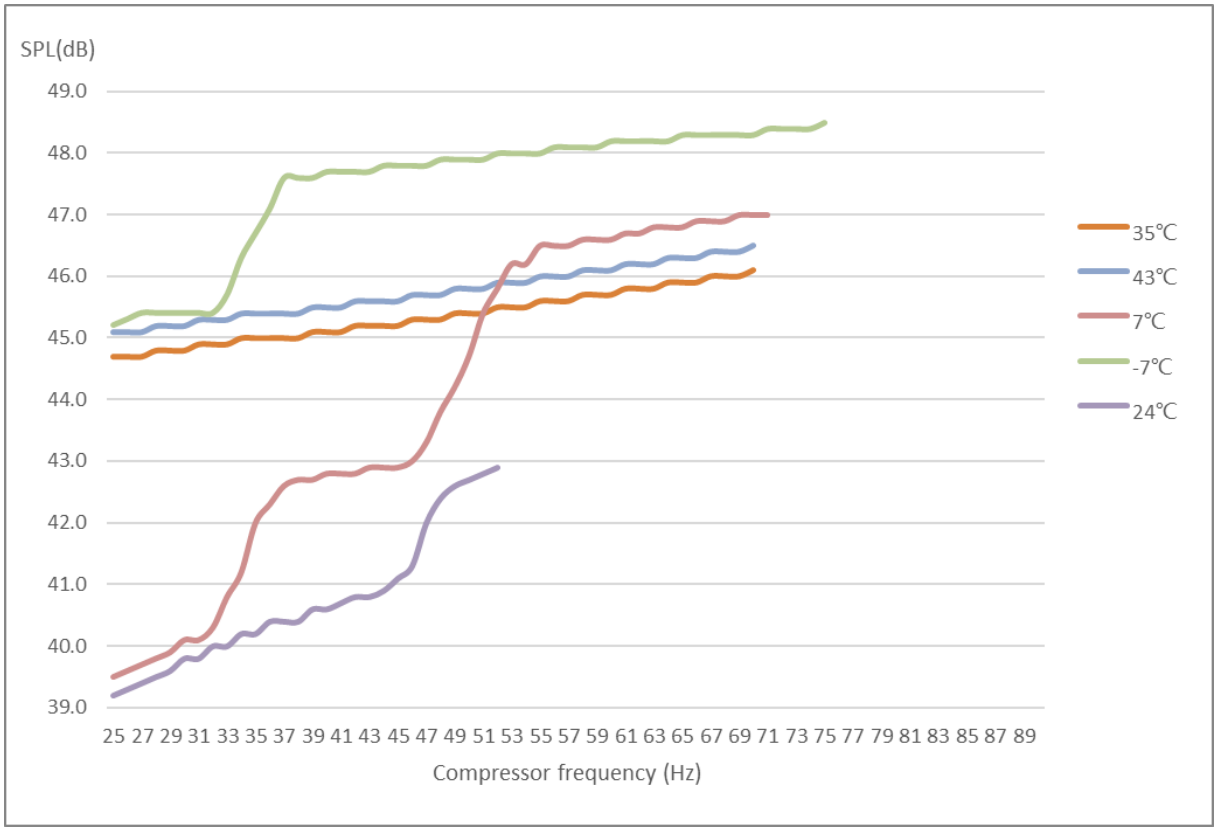

ACHP-H06/4R2HA-M; ACHP-H06/4R2HA-M(NE)

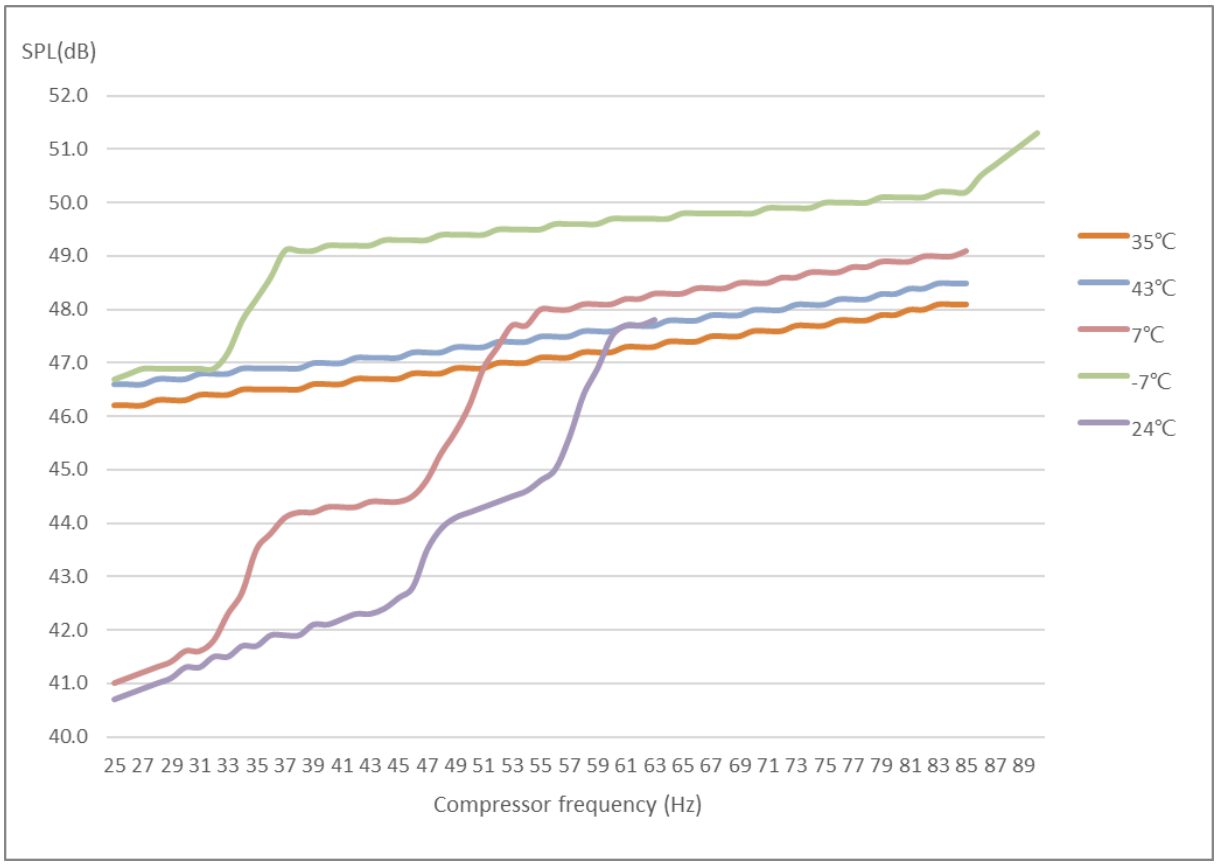

ACHP-H08/4R2HA-M；ACHP-H08/5R2HA-M; ACHP-H08/4R2HA-M(NE)

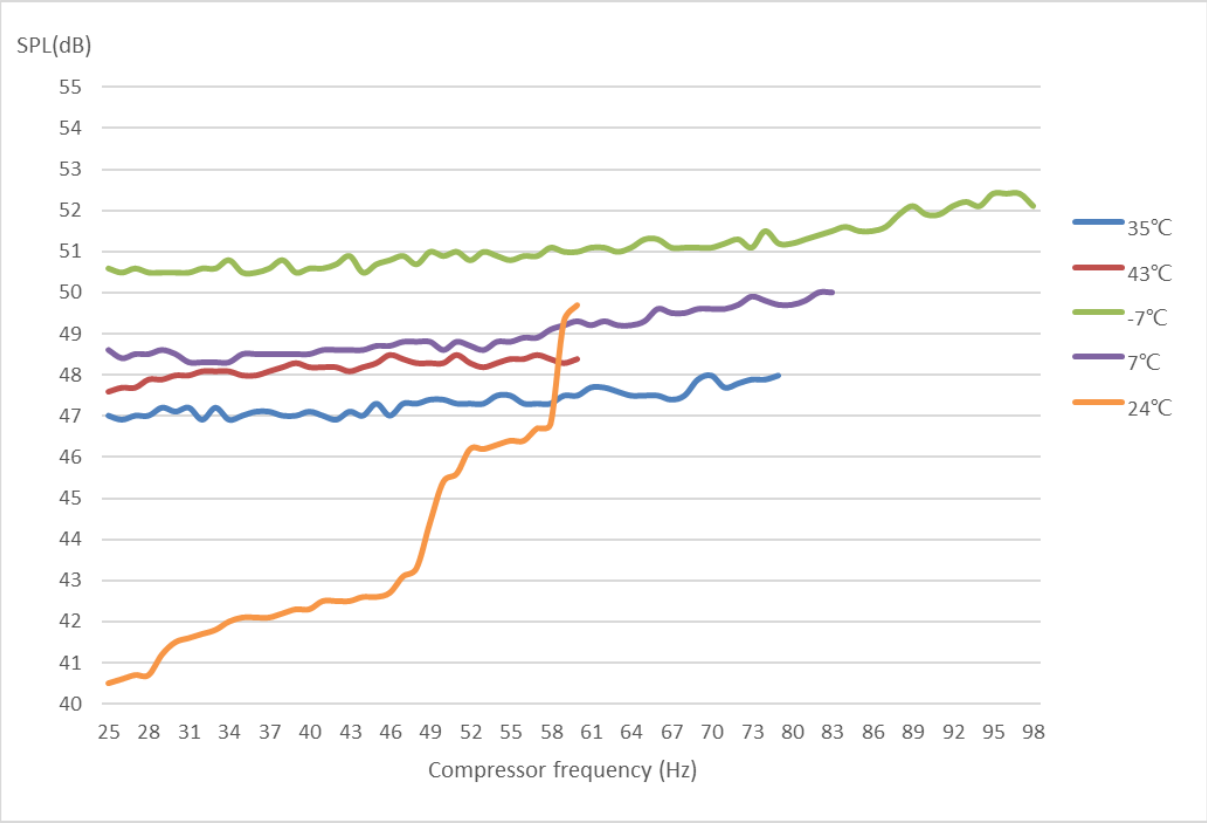

ACHP-H010/4R2HA-M；ACHP-H10/5R2HA-M; ACHP-H10/4R2HA-M(NE)

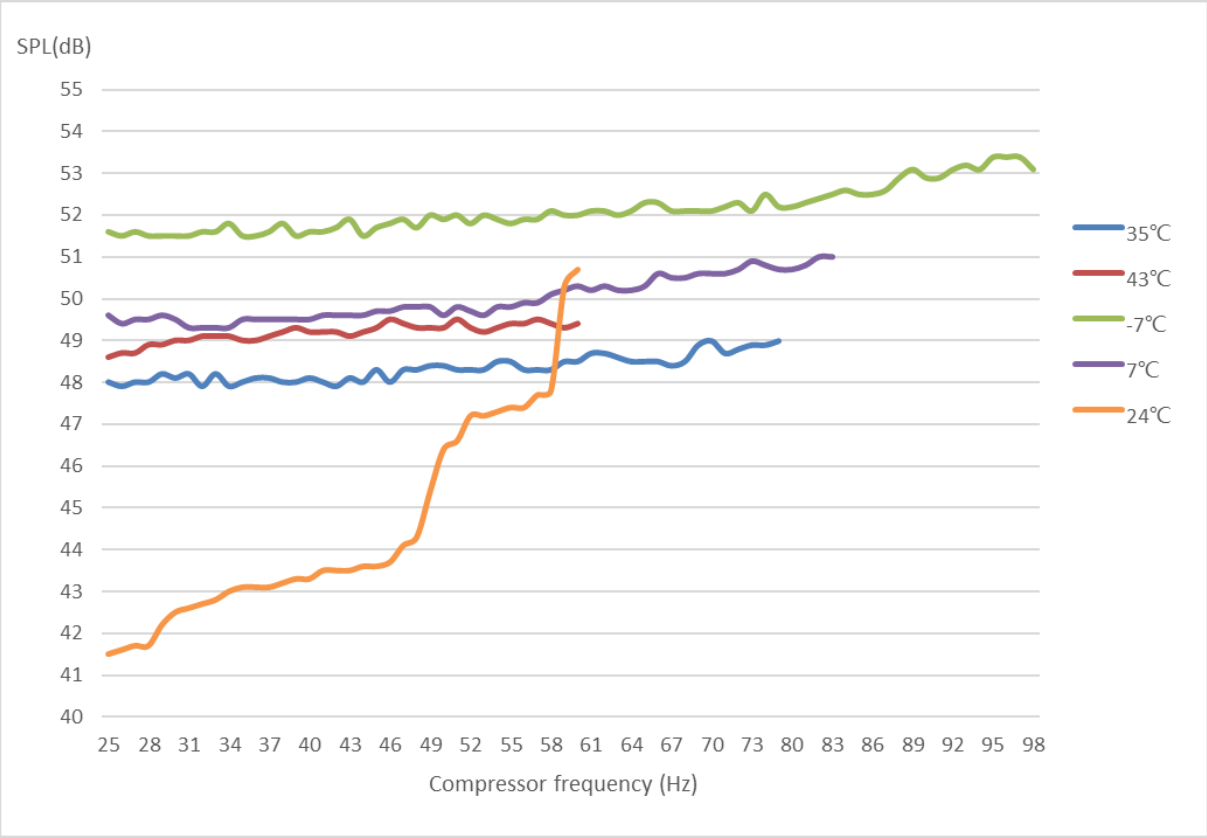

ACHP-H12/4R2HA-M；ACHP-H12/5R2HA-M; ACHP-H12/4R2HA-M(NE); ACHP-H12/5R2HA-M(NE)

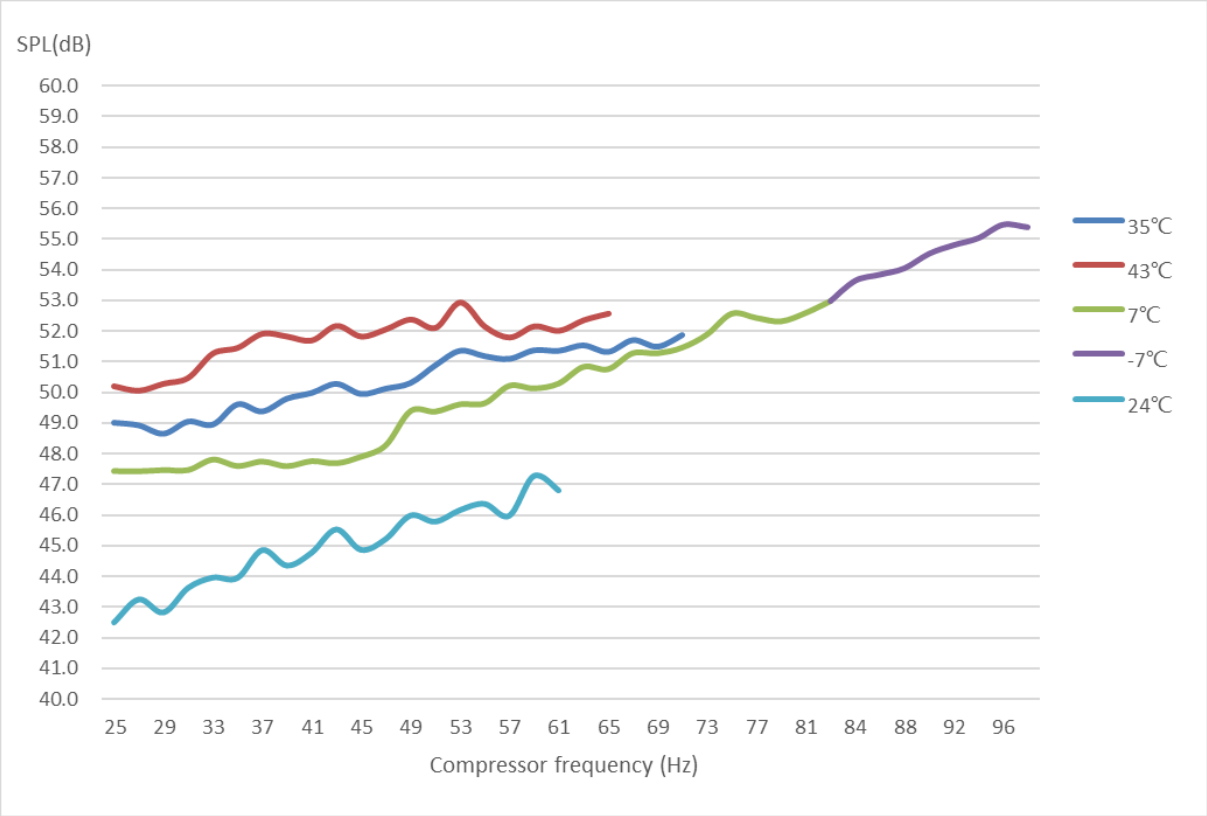

ACHP-H14/4R2HA-M；ACHP-H14/5R2HA-M; ACHP-H14/4R2HA-M(NE); ACHP-H14/5R2HA-M(NE)

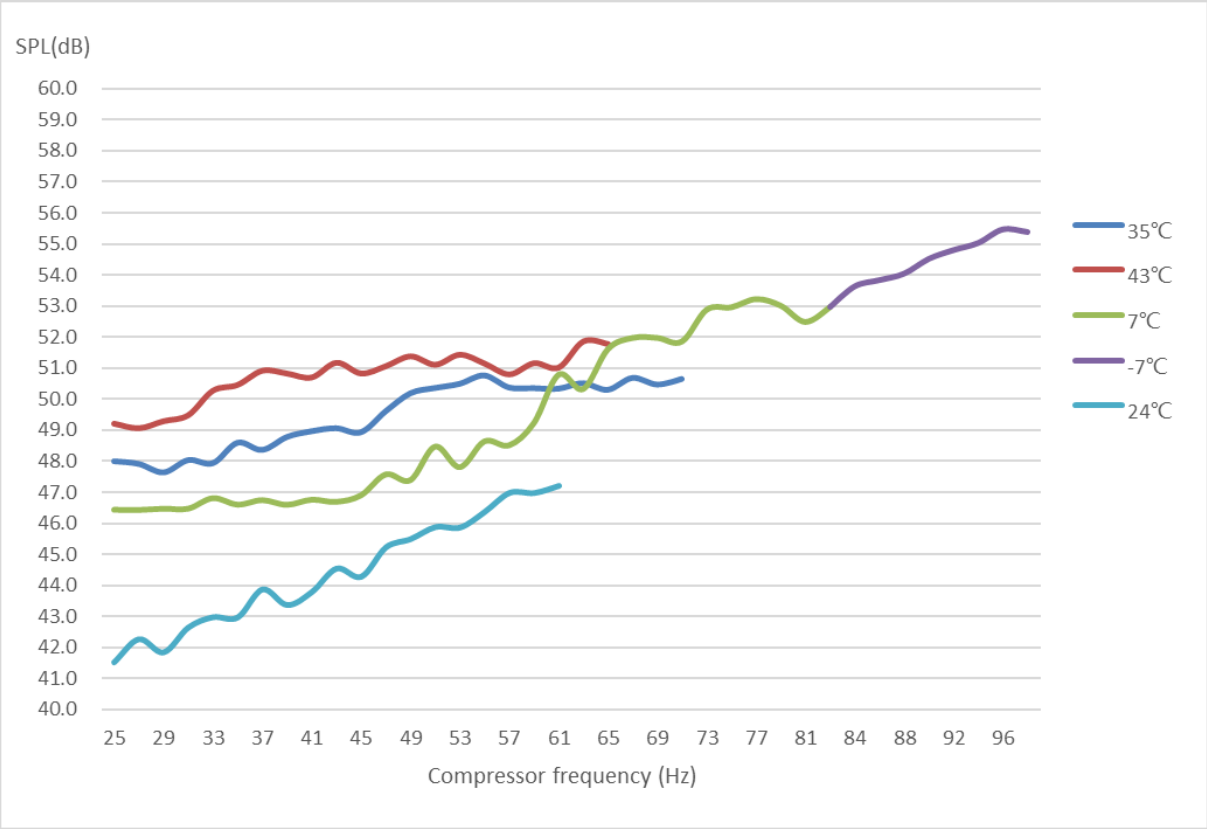

ACHP-H16/4R2HA-M；ACHP-H16/5R2HA-M; ACHP-H16/4R2HA-M(NE); ACHP-H16/5R2HA-M(NE)

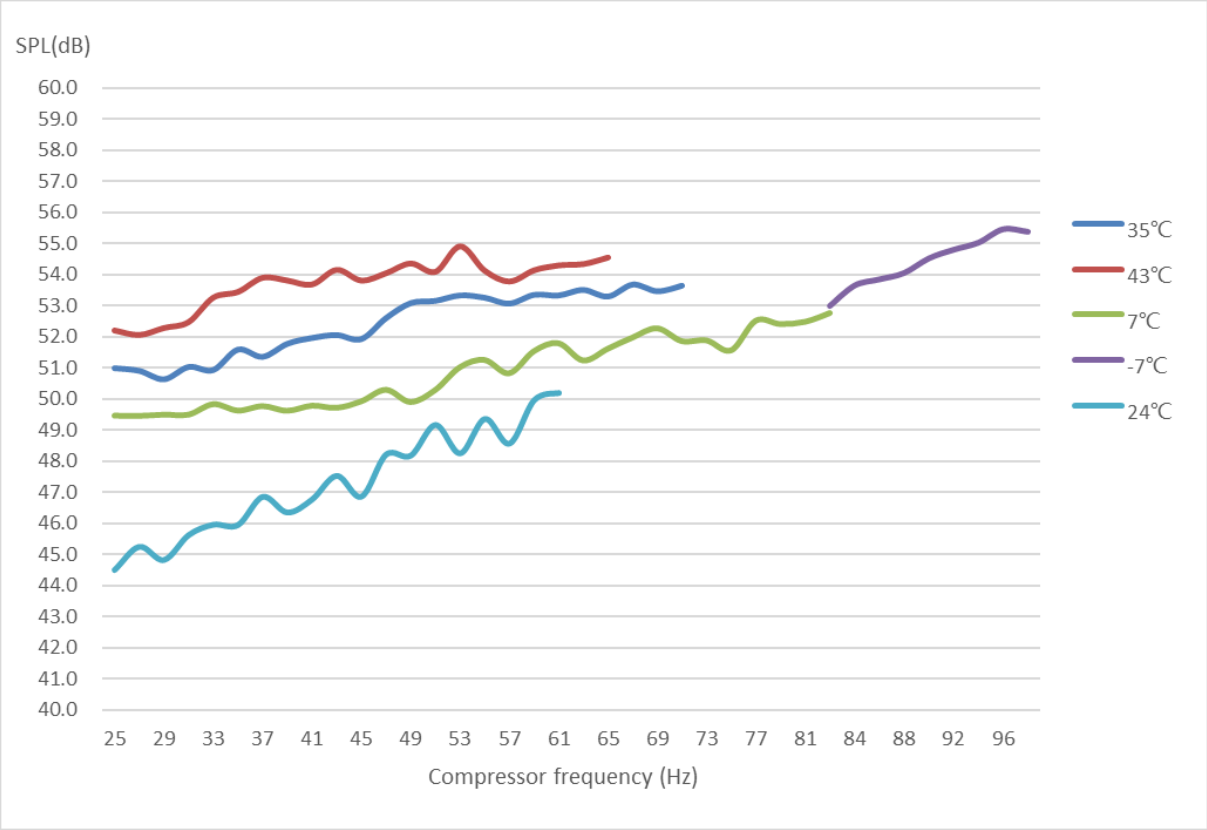

Part 10 Wired Controller

10.1 Introduction

During installation, the parameter settings should be configured by the installer to suit the installation configuration, climate conditions and user preferences. The relevant settings are accessible and programmable through the FOR SERVICEMAN menu on the wired controller.

10.2 The wired controller button

NO	Name	Logo	Description
1	Menu		Enter to menu interface
2	Confirm		Setting confirmation
3	Upward		Change selected item
4	Downward		Change selected item
5	Back		Return to the previous level
6	Mode		Mode Switch
7	Leftward		Change selected item
8	Rightward		Change selected item
9	ON/OFF		Control

10.3 Illustration

Icon	Name	Icon	Name	Icon	Name	Icon	Name
	SCREEN LOCK		WLAN		WIFI FAULT		WLAN WITHOUT CLOUD
	SCHEDULE		TIME BOOKING		DEFROST		ECO
	HOLIDAY		FREE ELEC.		CURRENT LIMITION		GAS
	ERROR		PEAK ELEC.		VALLEY ELEC		SILENT
	SOLAR		OUTDOOR TEMP		Zone1		Zone2
	INDOOR TEMP		WATER TEMP		WATER TEMP		SETTING TEMP
	COOL		HEAT		AUTO		EMERGENCY
	FLOOR PREHEAT		FLOOR DRYING		IBH		DHW PUMP
	ANTIFREEZE		COMPRESSOR		USB		Adjust temp
	TEMP KEEP		TEMP UP		TEMP DOWN		DHW
	FAST DHW		DISINFECT		TBH		RADIATOR
	2-WAY VALVE		KIT ROOM NUMBER		OFF		ON
		FLOOR HEAT				FAN COIL	

Note: More detailed information please refer to the wired controller instructions

Part 11 Control

11.1 Control way (Cooling mode and heating mode)

11.1.1 Outlet water temperature control

By measure the outlet water temperature to control heat pump turn on or turn off:

1) cooling mode：
   ① When outlet water temperature is lower than (Tset – dTSC_OFF), the heat pump will turn off
   ② When outlet water temperature is higher than (Tset + dTSC_ON), the heat pump will turn on
2) heating mode:
   ① When outlet water temperature of is higher than (Tset + dTSH_OFF), the heat pump will turn off
   ② When outlet water temperature of is lower than (Tset - dTSH_ON), the heat pump will turn on

11.1.2 Buffer tank temperature control

By measure the buffer tank temperature to control heat pump turn on or turn off:

1) Cooling mode (same with outlet water temperature control):
   ① When buffer tank temperature is lower than (Tset – dTSC_OFF), the heat pump will turn off
   ② When buffer tank temperature is higher than (Tset + dTSC_ON), the heat pump will turn on
2) Heating mode (same with outlet water temperature control):
   ① When outlet water temperature of is higher than (Tset + dTSH_OFF), the heat pump will turn off
   ② When outlet water temperature of is lower than (Tset - dTSH_ON), the heat pump will turn on

11.1.3 Thermostat control

Many thermostats can be connected to the heat pump, when thermostat control is activate, user can set room temperature by thermostat, and heat pump turn on or turn off is controlled by thermostat.

① When one or more thermostat is send on signal，heat pump will turn on;

② When all thermostat is send the off signal, heat pump will turn off.

11.1.4 Room temperature control

When choose the room temperature control, heat pump will operate according to the detected indoor temperature.

1) Cooling mode:
   ① When room temperature is higher than Tset，target water temperature is drop to reach room temperature;
   ② When room temperature is in Tset to Tset-1℃，target water temperature is maintain, and compressor is running according to water temperature.
   ③ When room temperature is lower than Tset-1℃,target water temperature is upraise to teach room temperature, and compressor is running according to water temperature
   ④ When room temperature is lower than Tset – dTSC_OFF, heat pump will turn off
   ⑤ When room temperature is higher than Tset + dTSC_ON, heat pump will turn on
2) Heating mode:

① When room temperature is higher than Tset +1℃, target water temperature is drop to reach room temperature;

② When room temperature is in Tset+1℃ to Tset, target water temperature is maintain, and compressor is running according to water temperature.

③ When room temperature is lower than Tset, target water temperature is upraising, and compressor is running according to water temperature

④ When room temperature is higher than Tset – dTSH_OFF, heat pump will turn off

⑤ When room temperature is lower than Tset + dTSH_ON, heat pump will turn on

11.2 DHW mode

11.2.1 Whether DHW mode is enabled (DHW mode)

Set whether to enable the DHW mode through the wired controller. When it is set to enable, the unit operates according to the control logic of the DHW mode. When the DHW mode is not enabled, the unit will turn off the hot water function.

11.2.2 Whether DHW PRIORITY is enabled (DHW PRIORITY)

When both the DHW mode and the air conditioner (cooling/heating mode) are turned on, you can set whether to turn on the DHW priority through the wired controller.

If the DHW priority is enabled：

1)If the water tank temperature ≥ water tank setting temperature - DHW mode start-operating temperature difference(dTSDHW_ON), the AC (cooling mode/heating mode) will run until the heat pump heating/cooling limit time (t_DHWHP_RESTRICT), then switch to DHW mode, after water tank reaching the target set temperature or the DHW mode reaching maximum time (t_DHWHP_MAX), switch back to AC (cooling mode/heating mode).

2)During the heat pump heating/cooling limit time(t_DHWHP_RESTRICT),if the water tank temperature ＜water tank setting temperature - DHW mode start-operating temperature difference(dTSDHW_ON), switch directly to DHW mode, after water tank reaching the target set temperature or the DHW mode reaching maximum time (t_DHWHP_MAX), switch back to AC (cooling mode/heating mode).

If the DHW priority is not enabled, the heat pump will run the AC (cooling mode/heating mode) first. After running until the water outlet temperature of the hydraulic box reaches the target set temperature, it will switch to DHW mode, and the DHW mode will keep running until the water tank temperature reaching the water tank set target temperature or the maximum time (t_DHWHP_MAX), then switch to the AC (cooling mode/heating mode) operation。

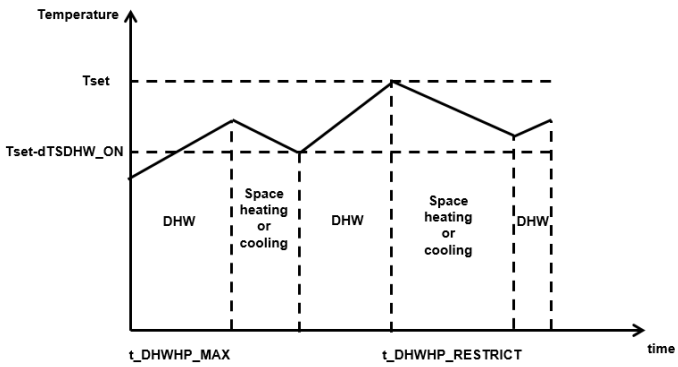

DHW PRIORITY

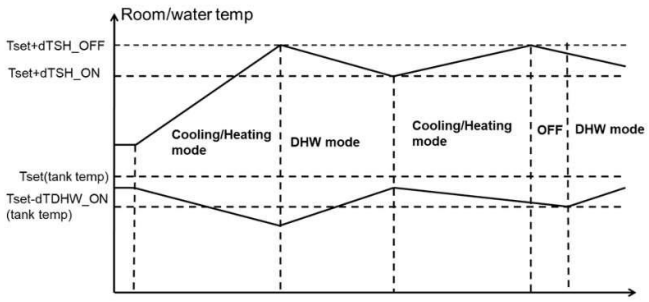

Without DHW PRIORITY

11.2.3 Maximum ambient temperature (Tao_DHWMAX)、Minimum ambient temperature (Tao_DHWMIN)

In the DHW mode setting interface, you can set the maximum ambient temperature (Tao_DHWMAX) and the minimum ambient temperature (Tao_DHWMIN) of the heat pump in DHW mode. When the outside ambient temperature＞Tao_DHWMAX or ＜Tao_DHWMIN, only the water tank electric heating (TBH) is turned on to produce hot water. Only When the outside ambient temperature＞ Tao_DHWMIN and＜ Tao_DHWMAX) ， the heat pump will produce hot water

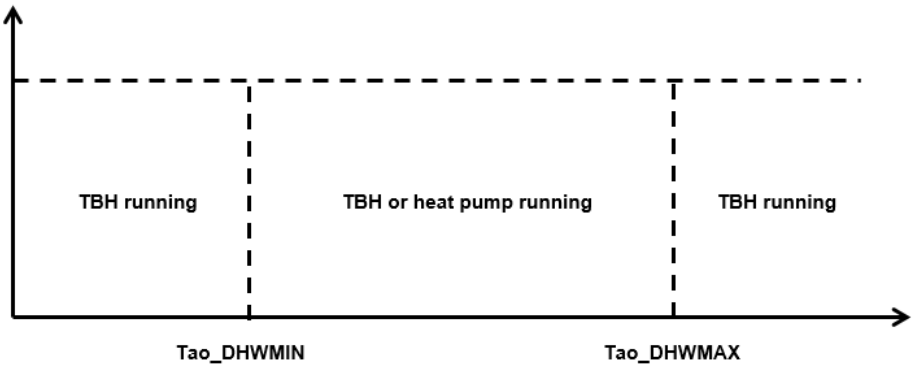

11.2.4 Delay time of water tank electric heating start after compressor start(t_TBH_DELAY)、Ambient temperature that allows water tank electric heating to start(Tao_TBS_ON)

Set the delay time of water tank electric heating start after compressor start (t_TBH_DELAY) by the wired controller， When the heat pump running time ≥ t_TBH_DELAY, and the outdoor ambient temperature <Tao_TBS_ON), if the temperature of the water tank does not reach the target temperature, turn on the electric heating of the water tank, and run together with the heat pump to produce hot water

11.2.5 Whether DHW PUMP is enabled (DHW PUMP)

Set whether the DHW pump is enabled or not through the wired controller. When the setting is enabled, set the start time and running duration of the DHW pump (DHW PUMP RUN TIME), When it is time to start the pump, the pump will start running, and when the running duration reaches the DHW PUMP RUN TIME, the pump will turn off.

11.2.6 DHW mode operation

The unit can heat water by controlling the operation of the compressor and the water tank electric heating (TBH). As shown below：

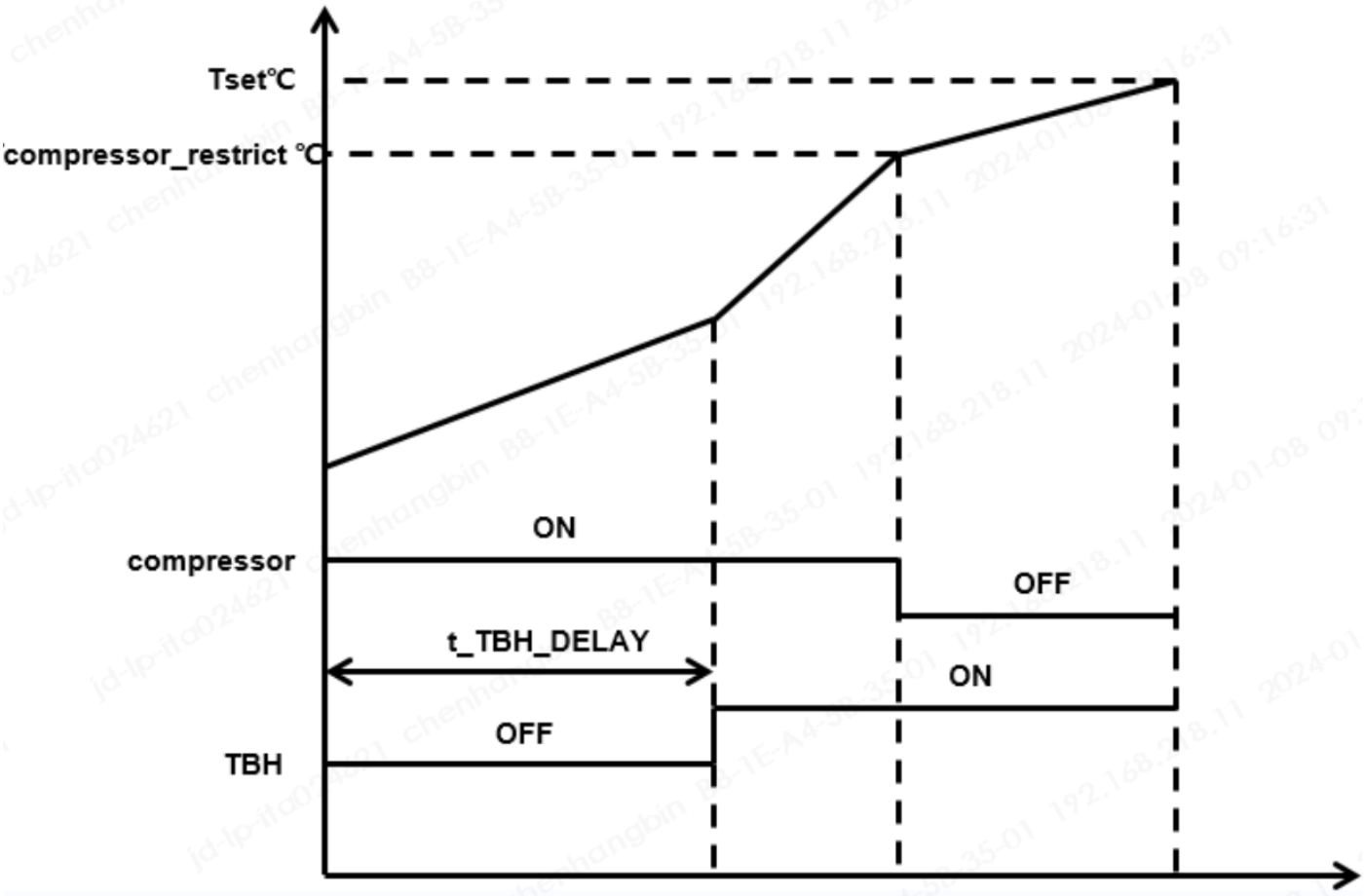

When the water tank temperature < Tset of the water tank, the compressor will turn on to produce hot water. When the compressor running time ＞t_TBH_DELAY and the outside ambient temperature <Tao_TBH_ON, if the water tank temperature＜ Tset, the electric heating of the water tank will turn on, and it runs together with the heat pump to produce hot water. When the water temperature in the water tank＞the max temperature of the water tank that the compressor can run, the compressor will turn off, and only use water tank electric heating to produce hot water. When the water tank temperature > the target set water tank temperature Tset℃, the electric heating of the water tank will turn off

11.3 Cooling mode

11.3.1 Whether cooling mode is enabled

Set whether to enable the cooling mode through the wired controller. When it is set to enable, the unit will operate cooling mode. When the cooling mode is set to be disabled, the unit will turn off cooling function.

11.3.2 Maximum outdoor ambient temperature (Tao_CMAX)、Minimum Outdoor Ambient Temperature (Tao_CMIN)

by setting the maximum cooling outdoor ambient temperature (Tao_CMAX) and the minimum outdoor ambient temperature (Tao_CMIN) to limit the operating temperature range of cooling mode. When outdoor ambient temperature ＞Tao_CMAX or＜Tao_CMIN, the unit will stop cooling operation

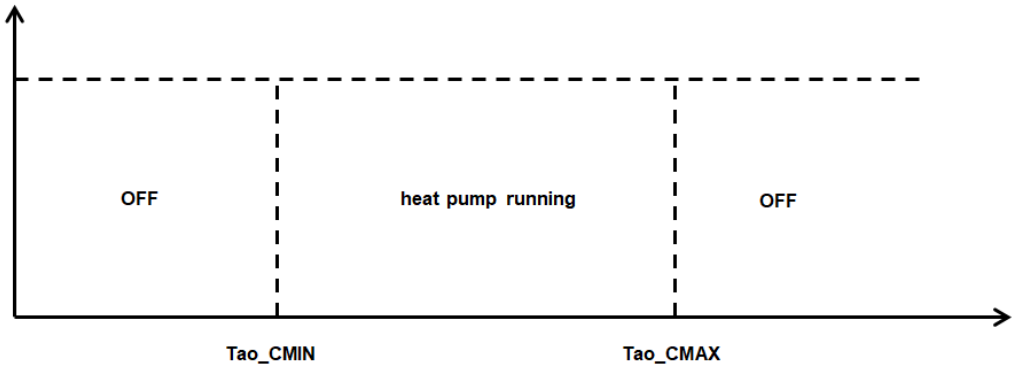

11.3.3 Cooling stop-operating temperature difference (dTSC_OFF)、cooling start-operating temperature difference (dTSC_ON)

In cooling mode, when the outlet water temperature of Hydraulic box reaches (Tset – dTSC_OFF), the heat pump is stopped and only the water pump is turned on; When it is detected that the outlet water temperature of Hydraulic box reaches (Tset + dTSC_ON), the heat pump is turned on for cooling operation

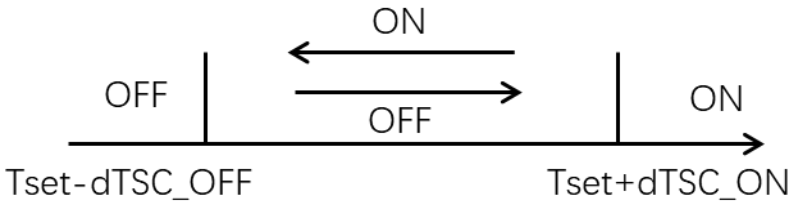

11.4 Double zone control

11.4.1 Floor heating mixed pump

After the double zone control is opened, the floor heating mixed pump continues to run.

11.4.2 Mixed valve (on/off)

1) If the floor heating water inlet temperature≥(Tset_FLH+dTwi_FLH_ON),the mix valve turn off.
2) If the floor heating water inlet temperature＜(Tset_FLH+dTwi_FLH_OFF),the mix valve turn on.
3) If (Tset_FLH+dTwi_FLH_OFF)≤the floor heating water inlet temperature＜(Tset_FLH+dTwi_FLH_ON),the return valve is time controlled.
4) Time control depends on floor heating mixed pump adjustment cycle(TIME_ADJUST) and opening time ratio of floor heating mixed pump(PER_START), pump running time=(TIME_ADJUST) * (PER_START).
5) The time control depends on the proportion of the mixing valve adjustment period and the opening time of the mixing valve: running time = adjustment period * opening time proportion

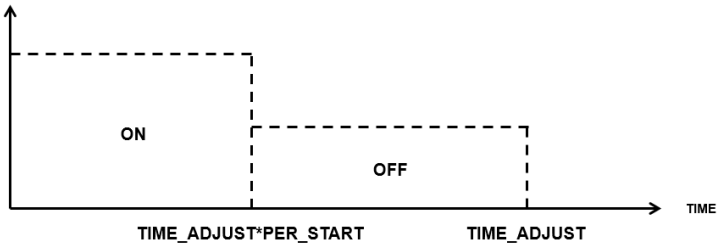

11.4.3 Mixed valve (0-10V)

1) If the user uses the step less regulation of the water mixing valve, it can be controlled by 0-10V voltage signal

11.5 Heating mode

11.5.1 Whether heating mode is enabled (heat mode)

Set whether to enable the heating mode through the wired controller. When enabled, the unit operates in the heating mode. When it is not enabled, the unit cannot operate heating function. If both the heating mode and the cooling mode are set to be disabled.

11.5.2 Maximum outdoor ambient temperature (Tao_HMAX)、Minimum Outdoor Ambient Temperature (Tao_HMIN)

by setting the maximum heating outdoor ambient temperature (Tao_HMAX) and the minimum outdoor ambient temperature (Tao_HMIN) to limit the operating temperature range of heating mode. When the outdoor ambient temperature＞Tao_CMAX or＜ Tao_CMIN, the unit will stop heating operation

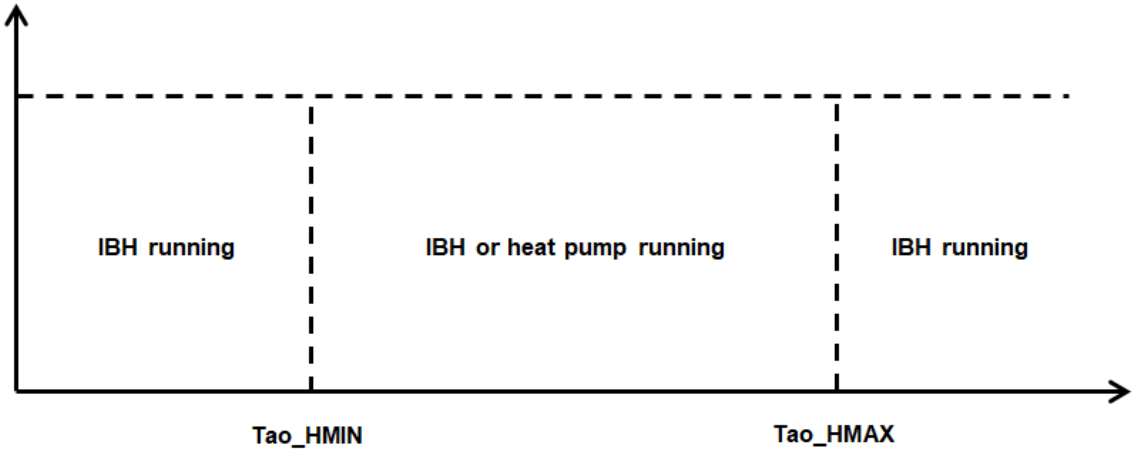

11.5.3 Heating stop-operating temperature difference (dTSH_OFF)、heating start-operating temperature difference (dTSH_ON)

In heating mode, when the outlet water temperature reaches (Tset + dTSH_OFF), the heat pump will stop operation and only the water pump is turned on; When the outlet water temperature reaches (Tset - dTSH_ON), the heat pump is turned on for heating operation.

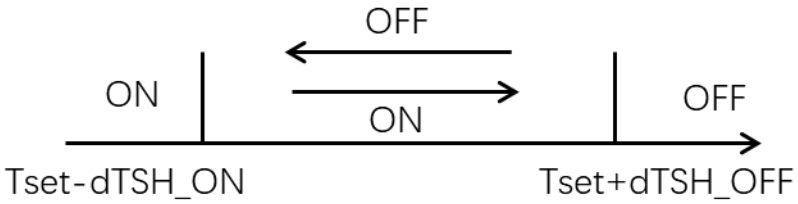

11.5.4 Delay time of Hydraulic box electric heating start after compressor start (t_IBH_DELAY)、Ambient temperature that allows Hydraulic box electric heating to start (Tao_IBH_ON)

Set Delay time of Hydraulic box electric heating start after compressor start (t_IBH_DELAY) by Wired

controller， When the heat pump running time ≥ (t_IBH_DELAY), and the outdoor ambient temperature < (Tao_TBS_ON), if the outlet water temperature does not reach the set target outlet water temperature TsetAC, the unit will turn on the electric heating, and run together with the heat pump to produce hot water

11.5.5 The ambient temperature at which the gas water heater is allowed to start (Tao_AHS_ON)

Set (Tao_AHS_ON) by Wired controller, when the gas water heater is enabled, and the outdoor ambient temperature < (Tao_AHS_ON), and the outlet water temperature ＜TsetAC, the gas water heater will be turned on

11.5.6 Heating mode operation

The unit can produce hot water by controlling the operation of the compressor, electric heating (IBH), and gas water heater (AHS). As shown below：

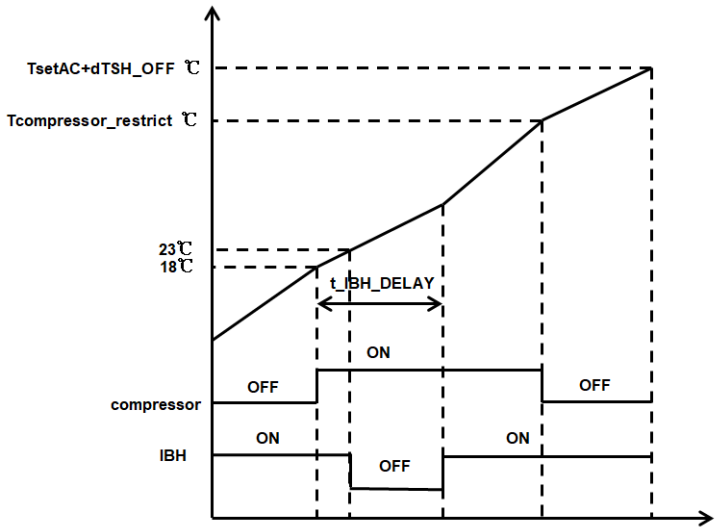

When the heating mode is turned on, if the outlet water temperature ＜18°C, turn on the electric heating first, and then turn on the compressor after the outlet water temperature ＞ 18°C， After the outlet water temperature ＞23°C, turn off the electric heating and only the compressor keeps running。When the compressor running time ＞t_IBH_DELAY) And when the outdoor ambient temperature <Tao_IBH_ON, the electric heating starts to run, and when the outlet water temperature reaches the maximum outlet water temperature (Tcompressor_restrict) the compressor stops running, and the outlet water temperature reaches (TsetAC+dTSH_OFF), the electric heating stops running。

11.6 Automatic mode

When the user selects the automatic mode, the operation mode is automatically switched according to the set cooling minimum temperature (Tao_AUTOCMIN) and heating maximum temperature (Tao_AUTOHMAX). When the outdoor ambient temperature <Tao_AUTOHMAX, the heat pump operates in the heating mode, and when the outdoor ambient temperature>Tao_AUTOCMIN), the heat pump operates in the cooling mode. If the DHW mode is enabled, the unit runs in Part10-2.DHW mode.

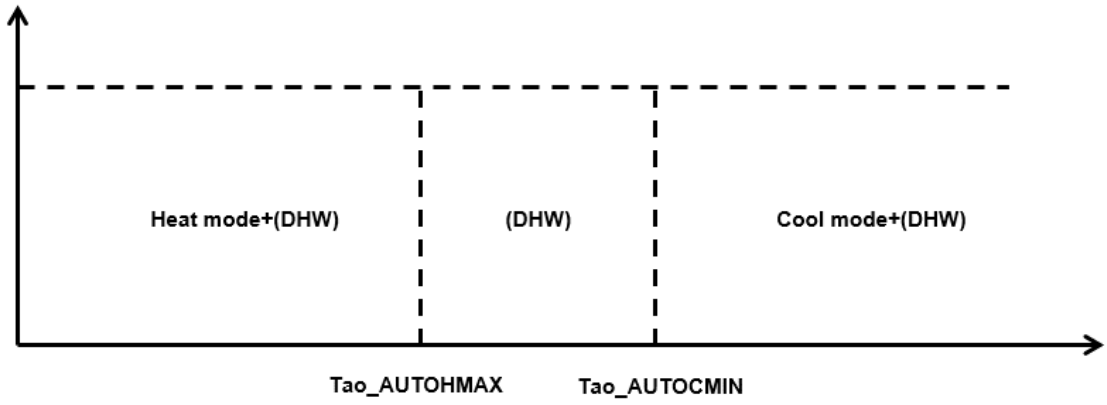

Note: a）In automatic cooling mode, MODBUS allow setting range: 5~25℃

b）In automatic heating mode, MODBUS allow setting range: 25~65℃

11.7 Disinfect

Set whether the water tank disinfection is enabled or not by the wire controller. When it is set to enable, after reaching the set opening time, the unit automatically turns on the water tank disinfection function, and runs according to the set disinfection water temperature and disinfection time. When it is not enabled, the unit will close the tank disinfection function

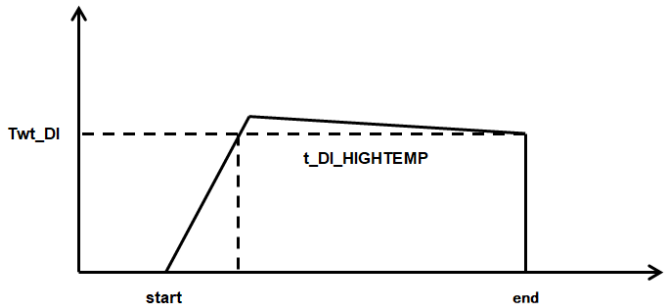

After the disinfection function of the water tank is turned on, the unit runs DHW mode and turns on the electric heating of the water tank, so that the temperature of the water tank rises.; After rising to the disinfection water temperature (Twt_DI)+1℃, the heat pump and the electric heating of the water tank are turned off, and the temperature in the water tank＞the disinfection water temperature (Twt_DI) ,operation time ≥ disinfection duration (t_DI_HIGHTEMP), exit the water tank for disinfection

11.8 Fast DHW

Set whether to enable the fast DHW function by the wired controller. After entering the fast DHW function, the heat pump operation mode is immediately switched to the DHW mode, and the electric heating of the water tank is turned on immediately. When the water tank temperature ≥ (Tset+1)℃ , exit the fast DHW, the electric heating of the water tank is turned off, and the heat pump returns to normal operation

11.9 ECO mode

The user can enter the ECO mode by the wired controller. the user selects one of the 8 built-in curves in the wired controller. Then enter ECO mode, The heat pump automatically sets the target outlet water temperature TsetAC according to the set terminal type、the selected operating curve and outdoor ambient temperature

When the user selects the heating mode, there are high water temperature curves and low water temperature curves. If the terminal type selected by the user is only floor heating (FLH), the low water temperature curve of the heating mode will be run, as shown in the figure below.：

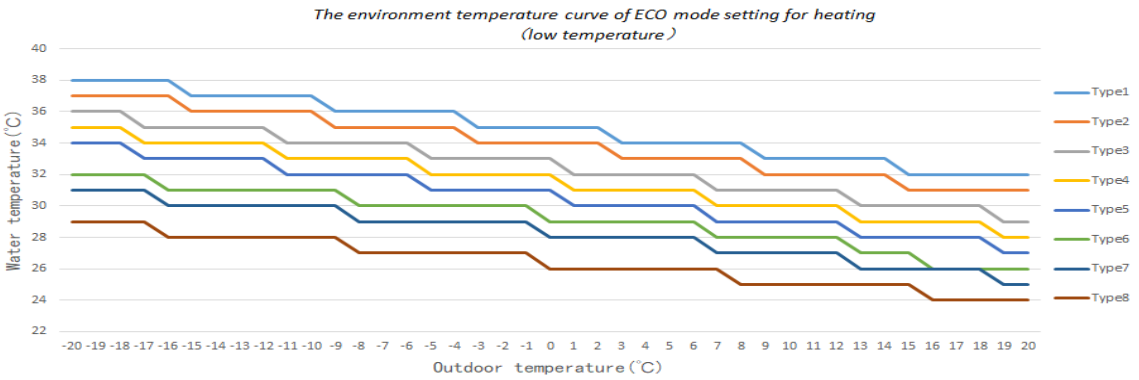

When the user selects the heating mode, if the selected terminal type contains radiator (RAD) or fan coil (FCU), the high water temperature curve of the heating mode will be run, as shown in the figure below：

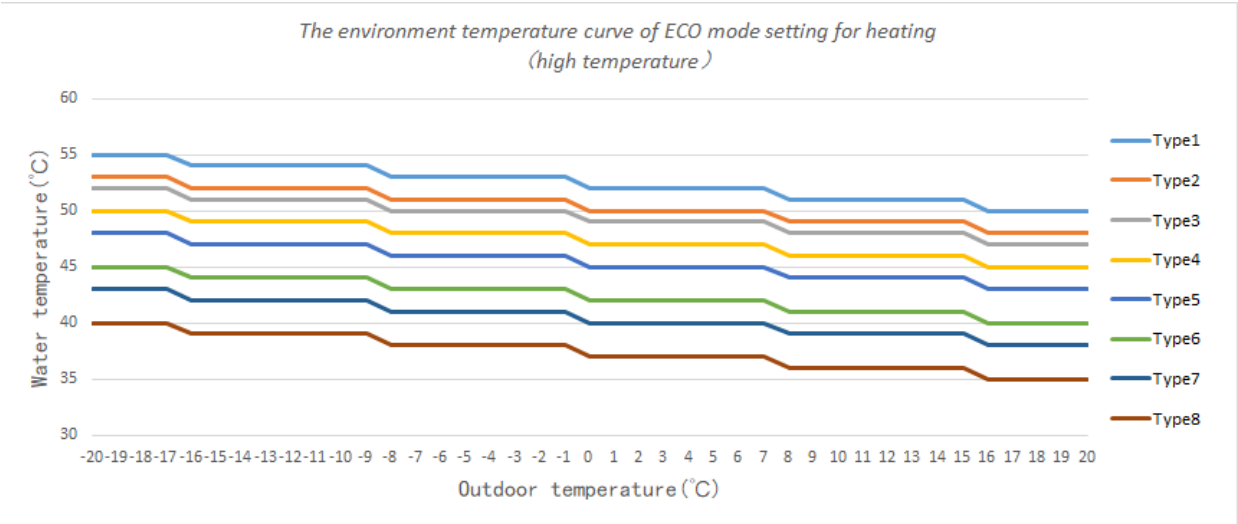

When the user selects the cooling mode, there are two water temperature curves: the high water temperature curve and the low water temperature curve. If the terminal type selected by the user contains floor heating (FLH) or radiator (RAD), the high water temperature curve of the cooling mode will be run, as shown in the figure below.：

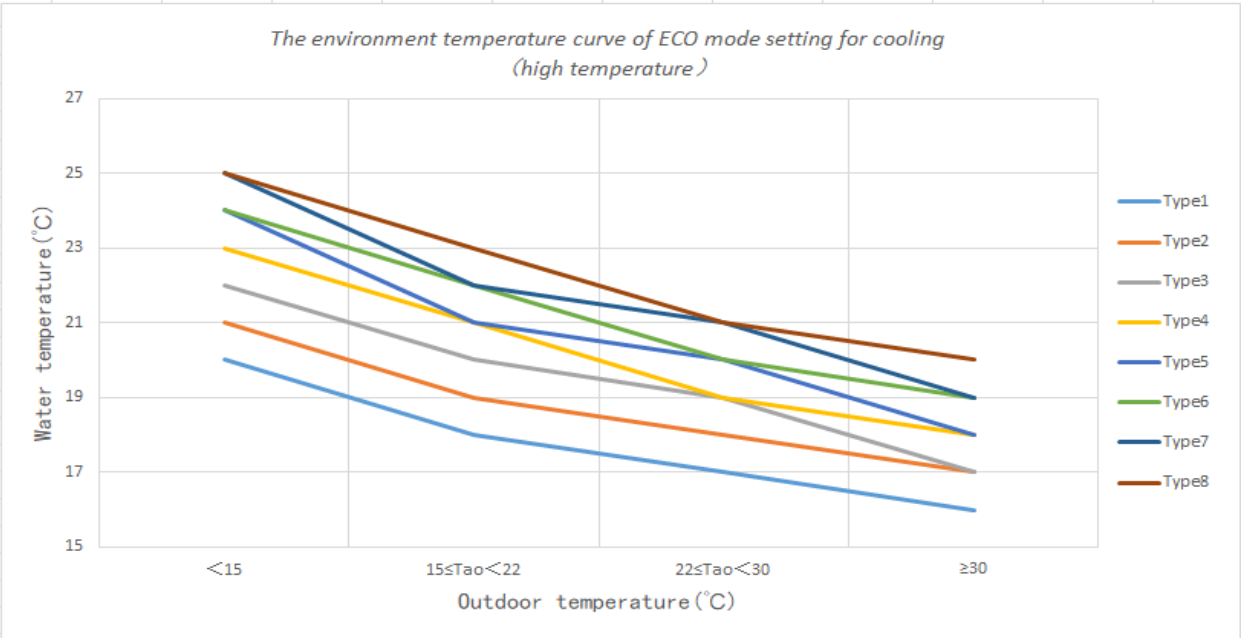

When the user selects the cooling mode, if there is only fan coil (FCU) in the selected terminal type, the low water temperature curve of the cooling mode will be run, as shown in the figure below.：

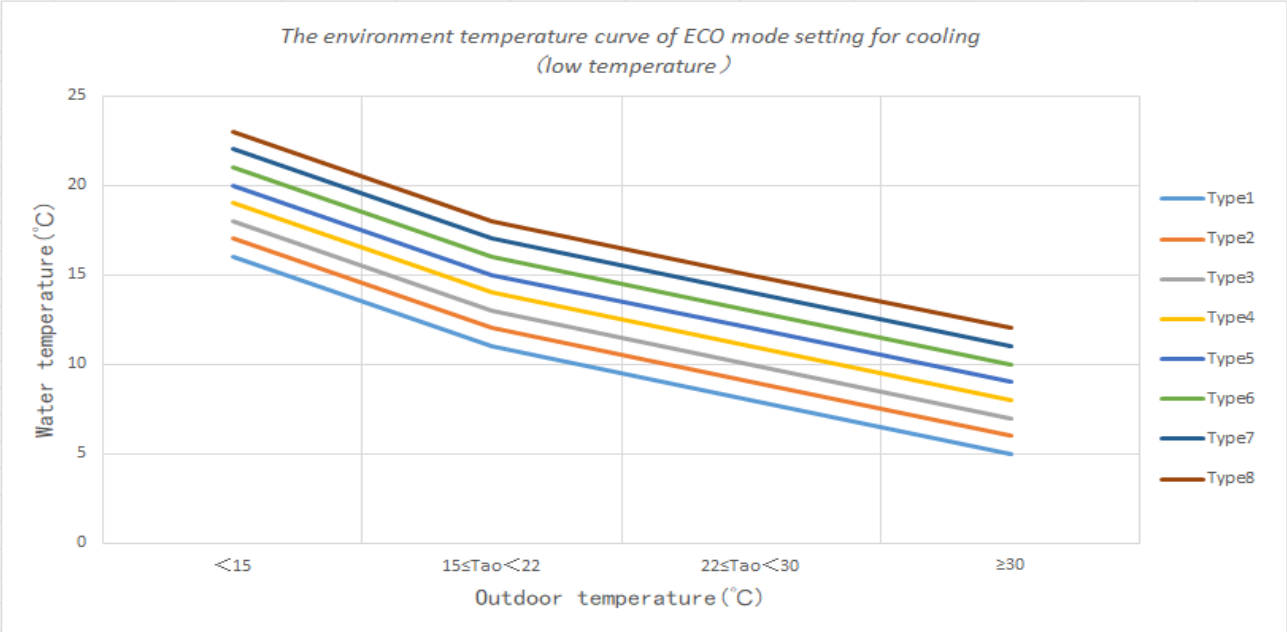

Note：ECO allowable setting range: Type1~Type8; after ECO is set, the automatic water temperature cannot be set.

11.10 Automatic water temperature function of Hydraulic box

When setting the automatic water temperature, the user can customize the running curve of the water temperature. The user only needs to set two outdoor ambient temperatures and two water temperatures as needed, and then a water temperature curve can be drawn, as shown in the figure.：

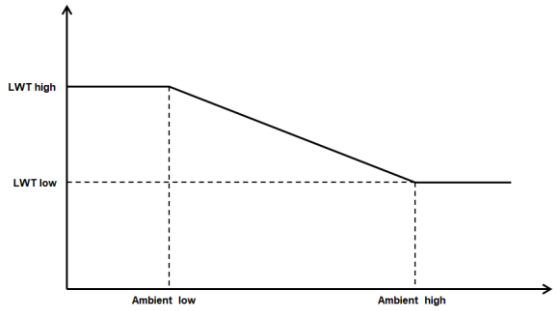

In this mode, the heat pump automatically sets the target outlet water temperature according to the drawn water temperature curve。

Note: Automatic water temperature allowable setting

range: Type1~Type9, after automatic water temperature is set, the ECO cannot be set.

11.11 Mute function

After entering the mute function, according to the selected mute level, limit the maximum operating frequency of the compressor of the Monoblock and the maximum speed of the fan to achieve mute function。

11.12 Holiday-away

After entering the holiday mode, the unit operates according to the setting heating outlet water temperature and DHW temperature during the holiday。

11.13 Holiday-home

After entering the holiday-home function, the unit operates according to the setting operation mode, outlet water temperature, water tank temperature, etc. during the holiday-home period.

11.14 Floor Preheating

The floor preheating function is divided into 5 stages, and the heat pump calculates the target outlet water temperature of each stage according to the detected outlet water temperature T0 and the set value of the outlet water temperature (Tset_B_PREHEATING). Calculate the running time of each stage according to the set duration t_fristFH of the floor preheating function。

After entering the floor preheating function, the heat pump operates in the heating mode. When the outlet water temperature reaches the target outlet water temperature of the current stage, the timing starts.； After the temperature is maintained for the running time of the current stage, the unit will enter next stage until the end of the 5th stage of operation. After the fifth stage, the unit enters the normal operation state。

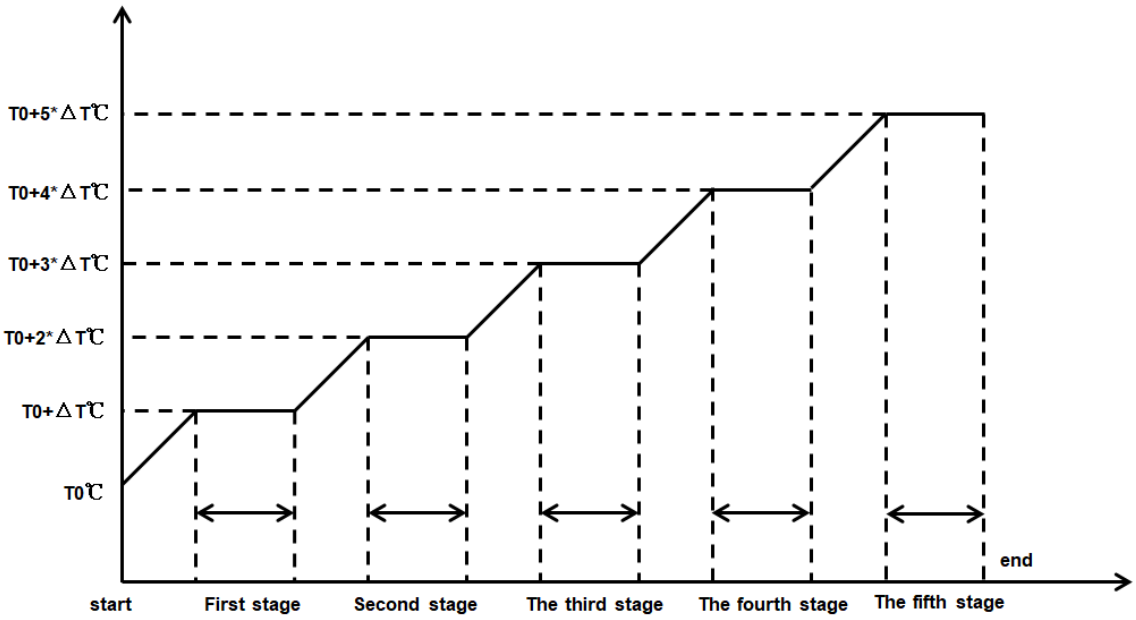

Note: Do not set ECO or automatic water temperature function when the Floor preheating is running

11.15 Floor drying

The floor drying function is divided into 3 operation cycles: heating cycle, holding cycle and cooling cycle. Each cycle is divided into different stages according to the settings.。

During the heating cycle, the heat pump calculates the target outlet water temperature at each stage

according to the outlet water temperature T0, the maximum floor drying water temperature T_DRYPEAK, and the heating cycle duration t_DRYUP. When the outlet water temperature reaches the target outlet water temperature of this stage, the timing starts. After the time meets the duration of the current stage, the next stage is entered. After the heating cycle is completed, the unit will enter holding cycle。

During the holding period, the target outlet water temperature of the heat pump is the maximum dry floor water temperature T_DRYPEAK. After the running time reaches the holding period duration t_HIGHPEAK, the unit will enter the cooling period。

During the cooling cycle, the heat pump calculates the target outlet water temperature for each stage according to the maximum drying water temperature T_DRYPEAK and the duration of the cooling cycle t_DRYDOWN. When the outlet water temperature reaches the target outlet water temperature of this stage, the timing starts. After the time meets the duration of the current stage, the unit will enter next stage. After the cooling cycle is completed , the unit will exit the floor drying mode。

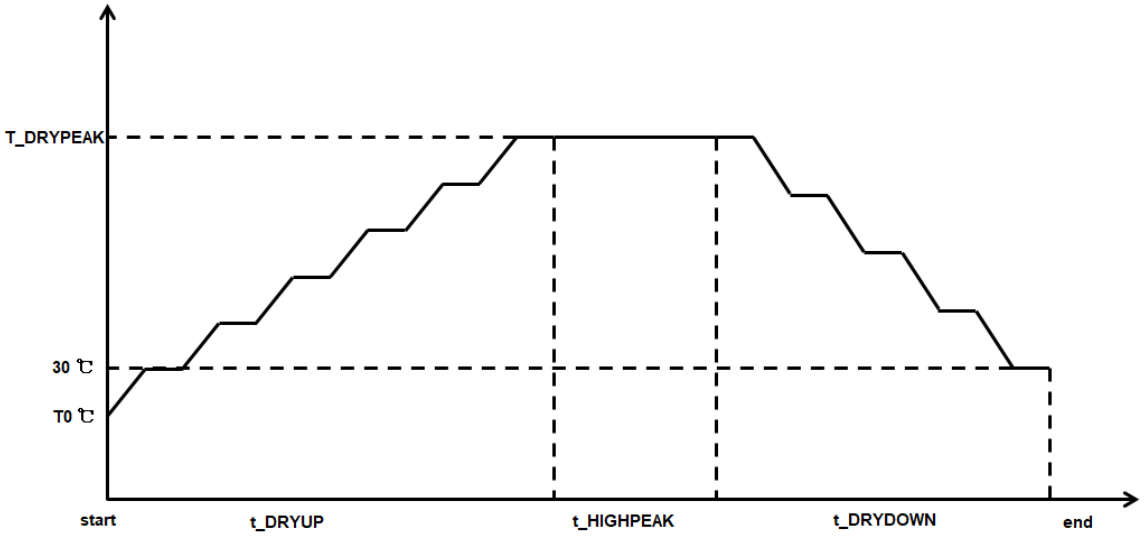

Note: Do not set ECO or automatic water temperature function when the Floor drying is running

11.16 Auto-restart function

When the auto-restart function is enabled, after power-on, the unit will continue to run according to the operation mode, the set target water temperature before the power-off

11.17 Manual operation function

Turn on the manual operation function, which can control the switch status of the system circulating water pump, electric heating, water tank electric heating, external circulating water pump, floor heating mixed water pump, solar water pump, domestic hot water (DHW) water pump, electric valve, etc.

11.18 Automatic exhaust function of water system

After the installation of the water system and the completion of adding water, the automatic exhaust function of the water system can be used to drain the gas in the system.

After entering the automatic exhaust function of the water system, the pump runs for 5 minutes and stops for 1 minute as a cycle.

The electric valve works as follows: 1) Electric valve MV1 is OFF, electric valve MV2 is ON, and 4 pump

cycles are run; 2) Electric valve MV1 is ON, electric valve MV2 is OFF, and 2 pump cycles are run; cyclic operation.

11.19 Heating water by gas water heater

When the heating function of the gas water heater is set to be enabled, set the outdoor ambient temperature Tao_AHS_ON that allows the gas water heater to be turned on by the wired controller. When the outdoor ambient temperature <Tao_AHS_ON and the outlet water temperature of the Hydraulic box < (TsetAC -dTSH_ON), the gas water heater is turned on. When the outdoor ambient temperature ≥ Tao_AHS_ON or the Hydraulic box outlet water temperature Two_B ≥(TsetAC + dTSH_OFF), the gas water heater is turned off.

11.20 Heating water by solar

The user can use solar energy to heat water by controlling the start and stop of the solar water pump. There are two control methods: signal control and temperature control.

Temperature control: when solar panel temperature Tsolar > water tank temperature Twt+8℃, and water tank temperature Twt < 65℃, the solar water pump is turned on; when solar panel temperature Tsolar < water tank temperature Twt+3℃ or water tank temperature Twt⩾70 ℃, the solar water pump is turned off.

Signal control: when it is detected that the solar input signal is closed and the water tank temperature Twt<65℃, the solar water pump is turned on; when it is detected that the solar energy input signal is disconnected or the water tank temperature Twt⩾70℃, the solar water pump is turned off.

11.21 Stop operation

The stop operation occurs for one of the following reasons:

1)Abnormal shutdown: in order to protect the compressors, if an abnormal state occurs the system makes a stop with thermos off operation and an error code is displayed on the monoblock PCB digital displays and wired controller.

2)The system stops when the set temperature has been reached, the compressor stop and the water pump will stop after 150 seconds.

11.22 Crankcase heater control

When the power supply is connected (ON), the following two conditions are used for control:

1)When compressor is ON:

When T exhaust ≤55(℃), open the heating belt; when T exhaust > 65(℃), close the heating belt.

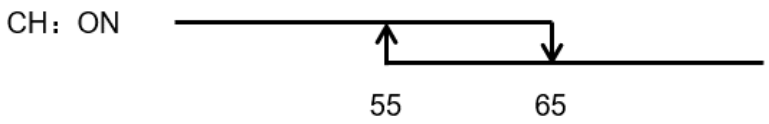

2) When compressor is OFF:

① When T exhaust ＞35(˚C),close the heating belt; when T exhaust≤25(˚C), open the heating belt.

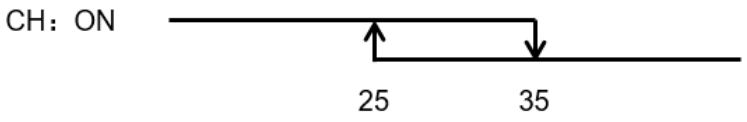

② The downtime of the compressor is more than 168 hours, no matter how much T exhaust is, close the heating belt.

11.23 Water pump control

The system stops when the set temperature has been reached, the internal water pump will stop after compressor stop 150s.

When reached the running condition, the internal water pump will turn on immediately.

11.24 Compressor startup delay control

Before starting the compressor again, it needs to ensure that the minimum shutdown time of the compressor is 3 minutes. This balances the pressure in the refrigerant system and prevents frequent compressor on/off.

11.25 Compressor startup program

Run at 30Hz for 3 minutes, then the compressor frequency is controlled by temperature difference between set temperature and outlet water temperature.

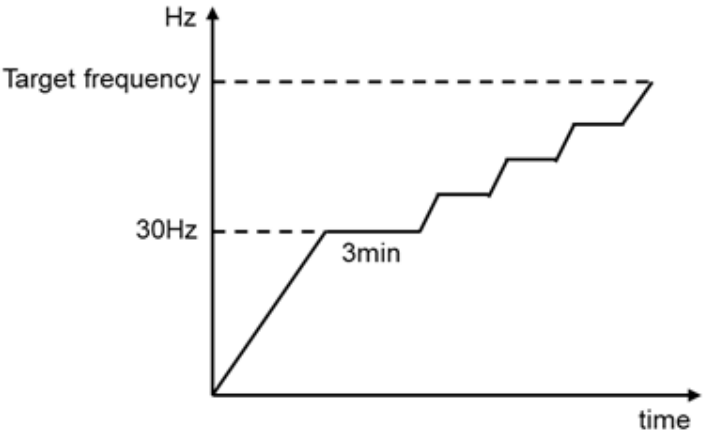

11.26 Startup control for heating and domestic hot water operation

Component	Wiring diagram label	4-16kW	Control functions and states
Inverter compressor	COMP	●	According to the compressor startup control
DC fan motor	FAN	●	According to ambient temperature and compressor frequency
Electronic expansion valve	EXV	●	According to initial steps and ambient temperature

Four-way valve	4-WAY	●	Outage

11.27 Startup control for cooling operation

Component	Wiring diagram label	4-16kW	Control functions and states
Inverter compressor	COMP	●	According to the compressor startup control
DC fan motor	FAN	●	According to discharge temperature
Electronic expansion valve	EXV	●	According to initial steps and ambient temperature
Four-way valve	4-WAY	●	Electrify

11.28 Component control during normal operation

11.28.1 Heating and Domestic Hot Water Operation

Component	Wiring diagram label	4-16kW	Control functions and states
Inverter compressor	COMP	●	According to the compressor startup control
DC fan motor	FAN	●	According to ambient temperature and compressor frequency
Electronic expansion valve	EXV	●	According to ambient temperature、Suction superheat and exhaust superheat control
Four-way valve	4-WAY	●	Outage

11.28.2 Cooling

Component	Wiring diagram label	4-16kW	Control functions and states
Inverter compressor	COMP	●	According to the compressor startup control
DC fan motor	FAN	●	According to discharge temperature
Electronic expansion valve	EXV	●	According to ambient temperature、Suction superheat and exhaust superheat control
Four-way valve	4-WAY	●	Electrify

11.29 Compressor output control

Compressor frequency is controlled by temperature difference between set temperature and outlet water temperature.

11.30 Compressor step control

Normal up and down frequency:1Hz/s

11.31 Four-way valve control

In heating and DHW mode, the four-way valve is powered off, and in cooling or defrosting, the four-way

valve is powered on

11.32 Electronic expansion valve control

Adjustment range: 0-480PLS

First power-on: Reset the electronic expansion valve

Control adjustment: Determine the initial opening according to the operating mode and outdoor ambient temperature, and then adjust according to the suction superheat and exhaust superheat

11.33 Fan control

Fan speed index	Fan speed (rpm)			
	4kW	6kW	8-10kW	12-16kW
W1	300	300	240	240
W2	350	380	330	330
W3	400	450	420	420
W4	450	520	480	510
W5	500	600	550	600
W6	520	600	580	630

11.34 High pressure protection control

Pd > 3.2MPa, indicating high pressure protection H1

Pd < 2.6MPa, the fault is recovered

High pressure protection occurs for three consecutive times, and the fault is locked. Power off and restart is required to eliminate the fault

11.35 Low pressure protection control

Pd < 0.03MPa, indicating low pressure protection H4

Pd > 0.1MPa, the fault is recovered

Low pressure protection occurs for three consecutive times, and the fault is locked. Power off and restart is required to eliminate the fault

11.36 Discharge temperature protection control

Td > 115℃, indicating exhaust temperature protection E3

Td < 90℃, the fault is recovered

11.37 Compressor current protection control

This control protects the compressor from abnormally high currents.

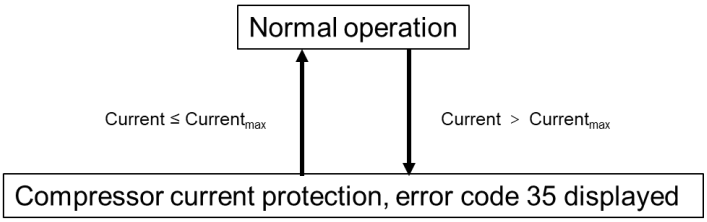

When the compressor current rises above Current$_{max}$ the system displays 35 protection and the unit stops running.

When the compressor current drops below Current$_{max}$, the compressor enters re-start control.

11.38 Voltage Protection Control

This control protects the machine from abnormally high or abnormally low voltages.

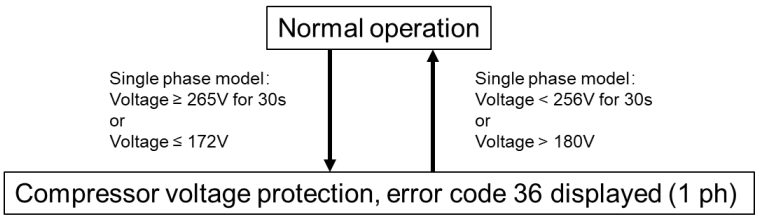

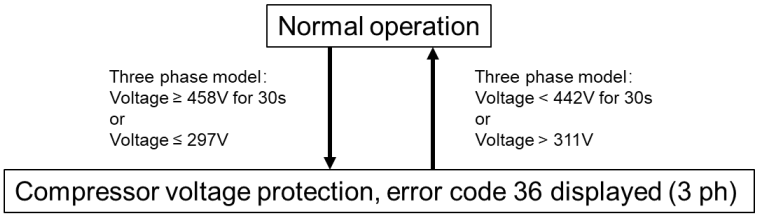

When the voltage of AC power supply is at or above 265V (458V for 3ph) for more than 30 seconds, the system displays 36 protection and the unit stops running. When the phase voltage drops below 256V (442V for 3ph) for more than 30 seconds, the refrigerant system restarts once the compressor re-start delay has elapsed. When the phase voltage is below 172V (297V for 3ph), the system displays 36 protection and the unit stops running. When the AC voltage rises to more than 180V (311V for 3ph), the refrigerant system restarts once the compressor re-start delay has elapsed.

11.39 DC Fan Motor Out of Step Protection Control

The out-of-step protection signal shall be detected immediately after the fan motor is started. Once the out-of-step protection signal is detected, the machine will be stopped immediately and the fan motor will stop immediately. It is recorded as temporary out-of-step protection (no fault is displayed). If the accumulative times exceed 3 times, it will display fan motor out-of-step fault for 3B(3H).

11.40 Water pipe Anti-Freeze Protection Control

Ambient temperature < 3℃, and inlet water temperature or leaving water temperature <10 ℃, run the water pump.

Ambient temperature < 0℃, and inlet water temperature or leaving water temperature <10 ℃, run the

Electric heating and compressor.

11.41 Oil Return Operation

In order to prevent the compressor from running out of oil, the oil return operation is conducted to recover oil that has flowed out of the compressor and into the refrigerant piping.

1) The oil return operation starts when the following condition occurs:

The compressor frequency is less than 50Hz, and the accumulated running time is 4h.

2) The oil return operation ceases when any one of the following three conditions occurs:

① Oil return operation duration reaches 3 minutes.

② Compressor stops.

③ Cooling mode：$T_{high\ pressure}$≥58℃；Heating mode：$T_{high\ pressure}$≥65℃

11.42 Defrosting Operation

In order to recover heating capacity, the defrosting operation is conducted when the monoblock air side heat exchanger is performing as a condenser. The defrosting operation is controlled according to outdoor ambient temperature, air side heat exchanger refrigerant outlet temperature and the compressor running time.

Component	Wiring diagram label	4-16kW	Control functions and states
Inverter compressor	COMP	●	According to the compressor startup control
DC fan motor	FAN	●	OFF
Electronic expansion valve	EXV	●	480pls
Four-way valve	4-WAY	●	Electrify

11.43 Fast DHW Operation

Component	Wiring diagram label	4-16kW	Control functions and states
Inverter compressor	COMP	●	According to the compressor startup control
DC fan motor	FAN	●	According to ambient temperature
Electronic expansion valve	EXV	●	According to ambient temperature、Suction superheat and exhaust superheat control
Four-way valve	4-WAY	●	Outage
Tank electric heater	TBH	●	ON

11.44 Smart grid control

Unit adjusts the operation according to different electric signals to realize energy saving.

Free electric energy signal: DHW mode turn on, the setting temperature will be changed to 70 ℃ automatically, and the TBH operate as below: TWT<70. the TBH is on, TWT⩾71, the TBH is off. The unit operates in cooling/heating mode as the normal logic.

Valley energy signal: unit operates according to users' need.

Peak energy signal: only available for cooling or heating mode and user can set the maximum operating time.

11.45 Buffer tank temperature control

Buffer tank temperature sensor is used to control on/off of heat pump.

Once the heat pump stops, internal pump stops to save energy and then buffer tank provides hot water for space heating.

In addition, buffer tank can store energy to provide hot water whilst heat pump runs heating/cooling mode, which can reduce the host selection and the initial investment.

Part 12 PCB Instruction

12.1 Water System Control PCB

12.1.1 Main PCB

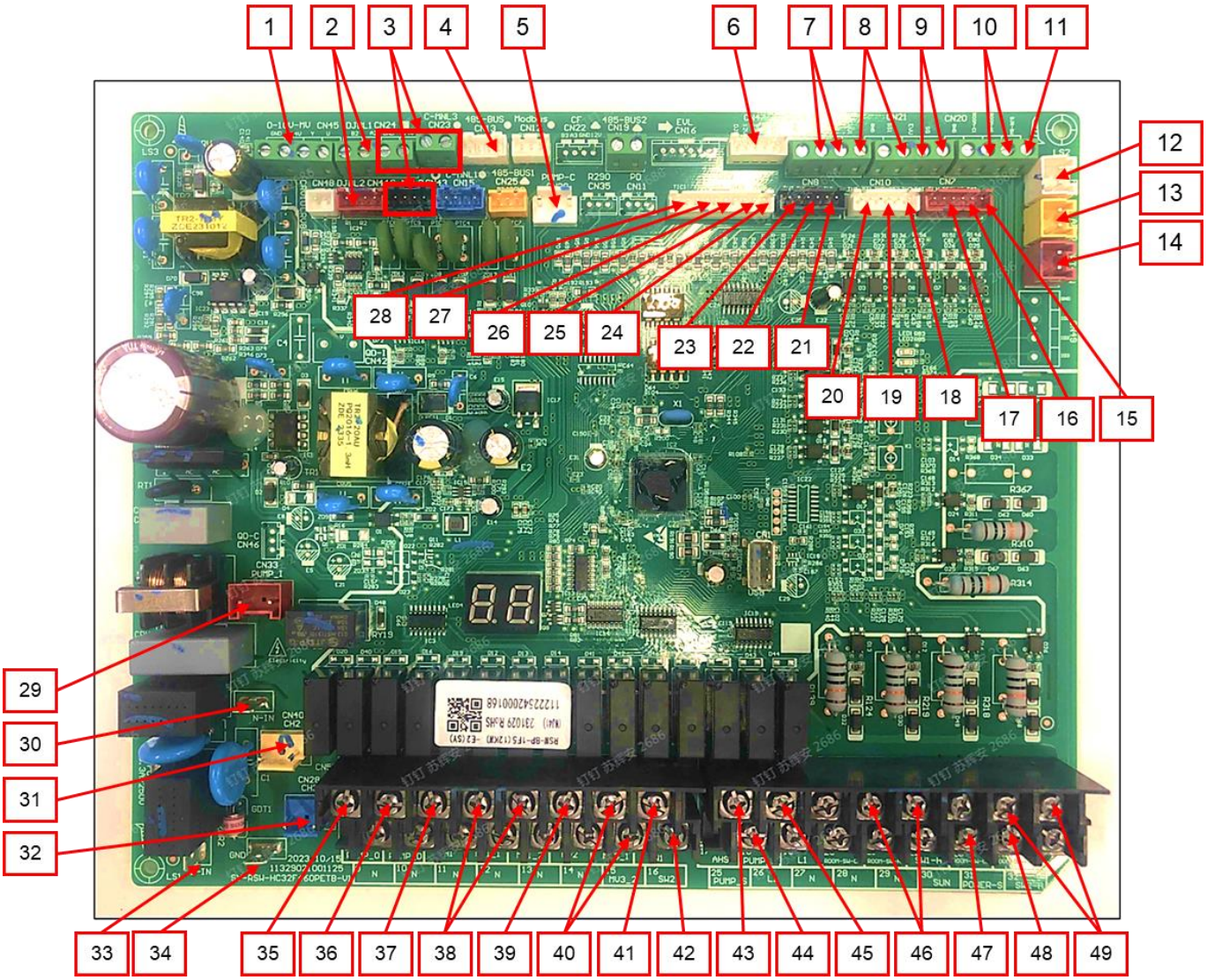

No.	Remark	No.	Remark
1	Water mixing valve	26	Plate heat exchanger inlet temperature (TWI)
2	Parallel	27	Indoor coil outlet (TICO)
3	Wired controller	28	Indoor coil inlet (TICI)
4	Refrigerant system communication	29	Variable frequency pump
5	Direct current pump	30	Zero line
6	Relay PCB	31	Antifreeze heating belt
7	Thermostat switch (low voltage) (sub)	32	Expansion tank heating belt
8	Smart Grid 2	33	Firing line
9	Smart Grid 1	34	Ground line
10	Thermostat switch (low voltage) (main)	35	External water pump
11	Back-up electric heating	36	DHW water pump
12	Target flow switch	37	Water tank electric heating 1

13	Anti-freeze low pressure switch	38	Three-way valve 1
14	Electric heating protection switch	39	Two-way valve
15	Room temperature 1 (main zone) (TAI)	40	Three-way valve 2
16	Solar water heater temperature (TSOLAR)	41	Defrost signal
17	Room temperature 2 (second zone) (TAI_FLH)	42	Compressor signal
18	Reserve	43	Auxiliary heat source
19	Buffer tank temperature 2 (TWT_BT2)	44	Solar water pump
20	Buffer tank temperature 1 (TWT_BT1)	45	Floor heating mixing pump
21	Reserve	46	Thermostat switch (high voltage) (main)
22	Floor heating inlet temperature (TWI_FLH)	47	Solar switch
23	DHW water tank temperature (TWT)	48	Standby power supply
24	Plate heat exchanger outlet temperature (TWO1)	49	Thermostat switch (high voltage) (sub)
25	Electric heating outlet temperature (TWO2)		

12.1.2 Expansion board

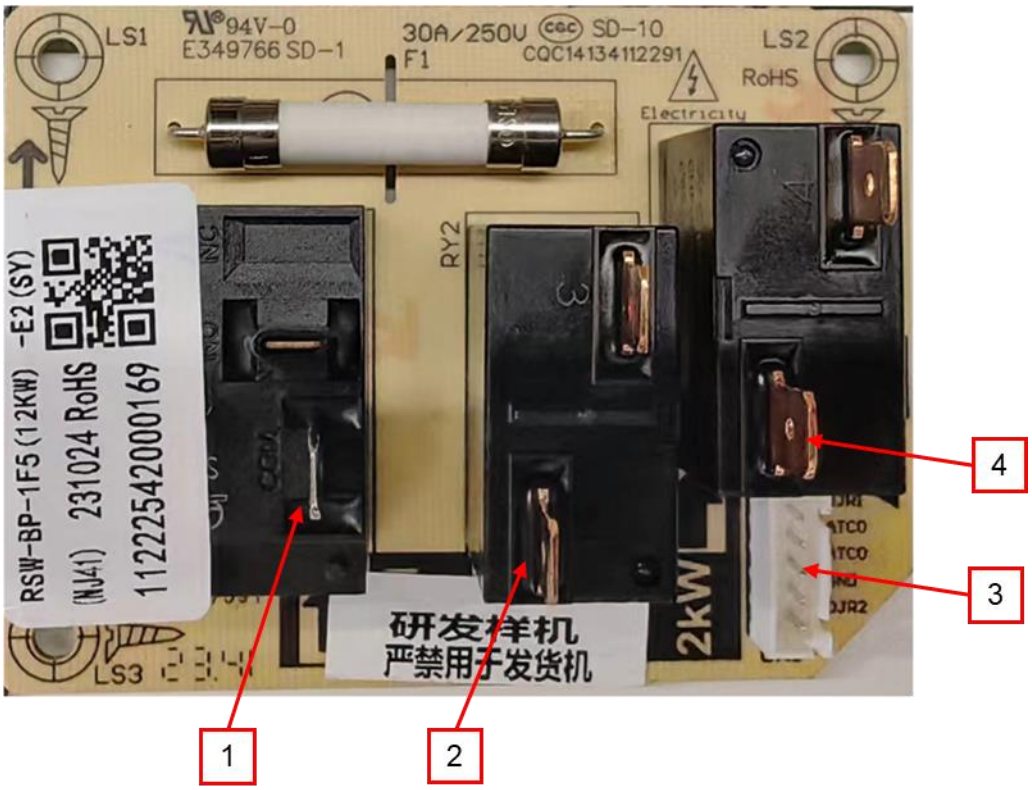

No.	Remark	No.	Remark
1	Firing line	3	Water system PCB
2	1kW electric heating firing line	4	2kW electric heating firing line

12.2 Refrigerant System Control PCB

12.2.1 ACHP-H04/4R2HA-M；ACHP-H06/4R2HA-M

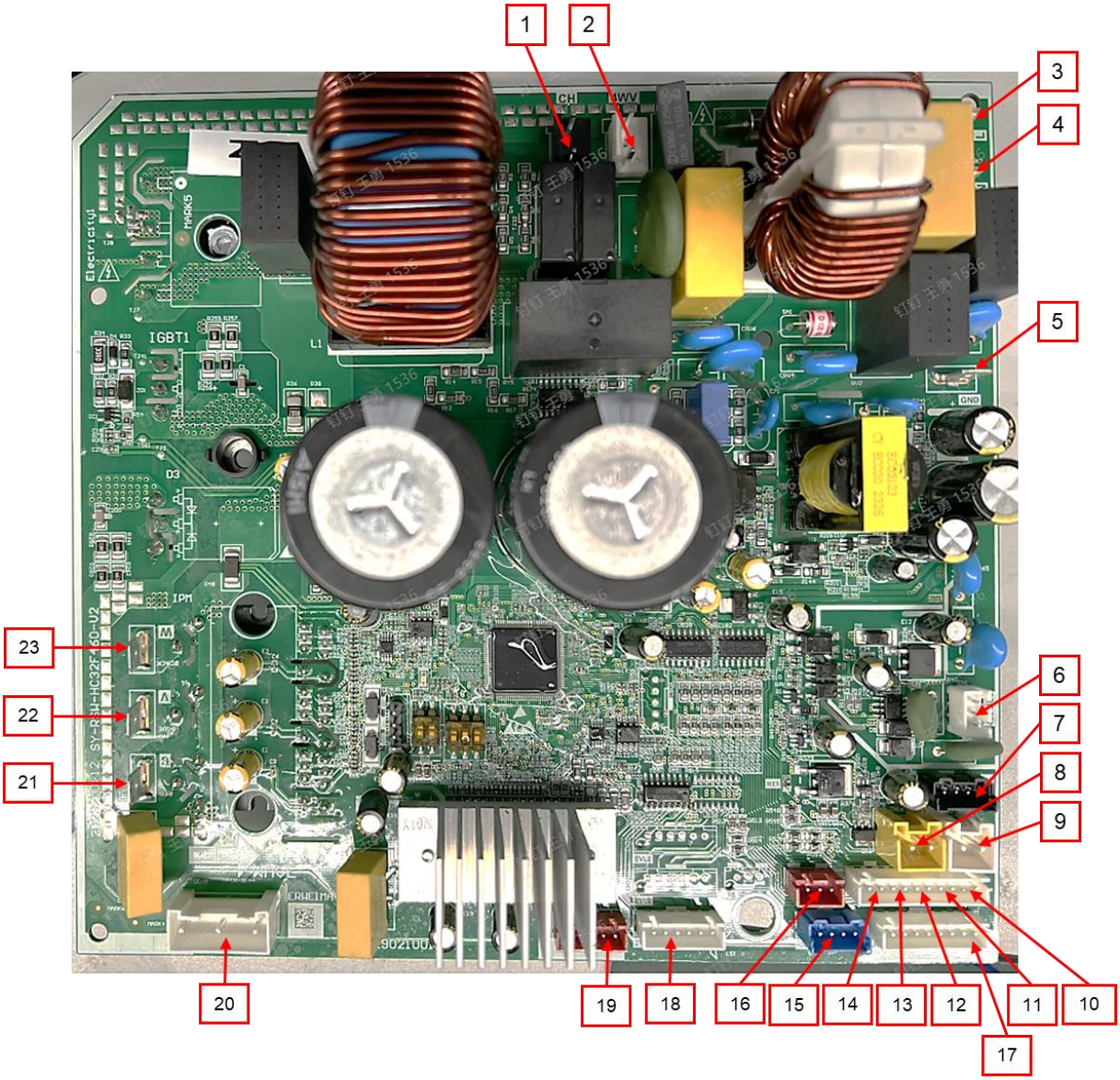

Num.	Remark	Num.	Remark
1	Chassis heater	13	Suction temperature sensor (TS)
2	4-way valve	14	Outdoor ambient temperature sensor (TAO)
3	AC-L	15	Reserve
4	AC-N	16	High pressure sensor
5	GND	17	Reserve
6	Water system communication	18	EXV
7	DC fan	19	Reserve
8	High pressure switch	20	DC motor
9	Low pressure switch	21	Compressor-U
10	Discharge temperature sensor (TD)	22	Compressor-V
11	Mid coil temperature sensor (TCM)	23	Compressor-W
12	Defrost temperature sensor (TDEF)		

12.2.2 ACHP-H08/5R2HA-M; ACHP-H10/5R2HA-M; ACHP-H12/5R2HA-M; ACHP-H12/5R2HA-M(NE); ACHP-H14/5R2HA-M; ACHP-H14/5R2HA-M(NE); ACHP-H16/5R2HA-M; ACHP-H16/5R2HA-M(NE)

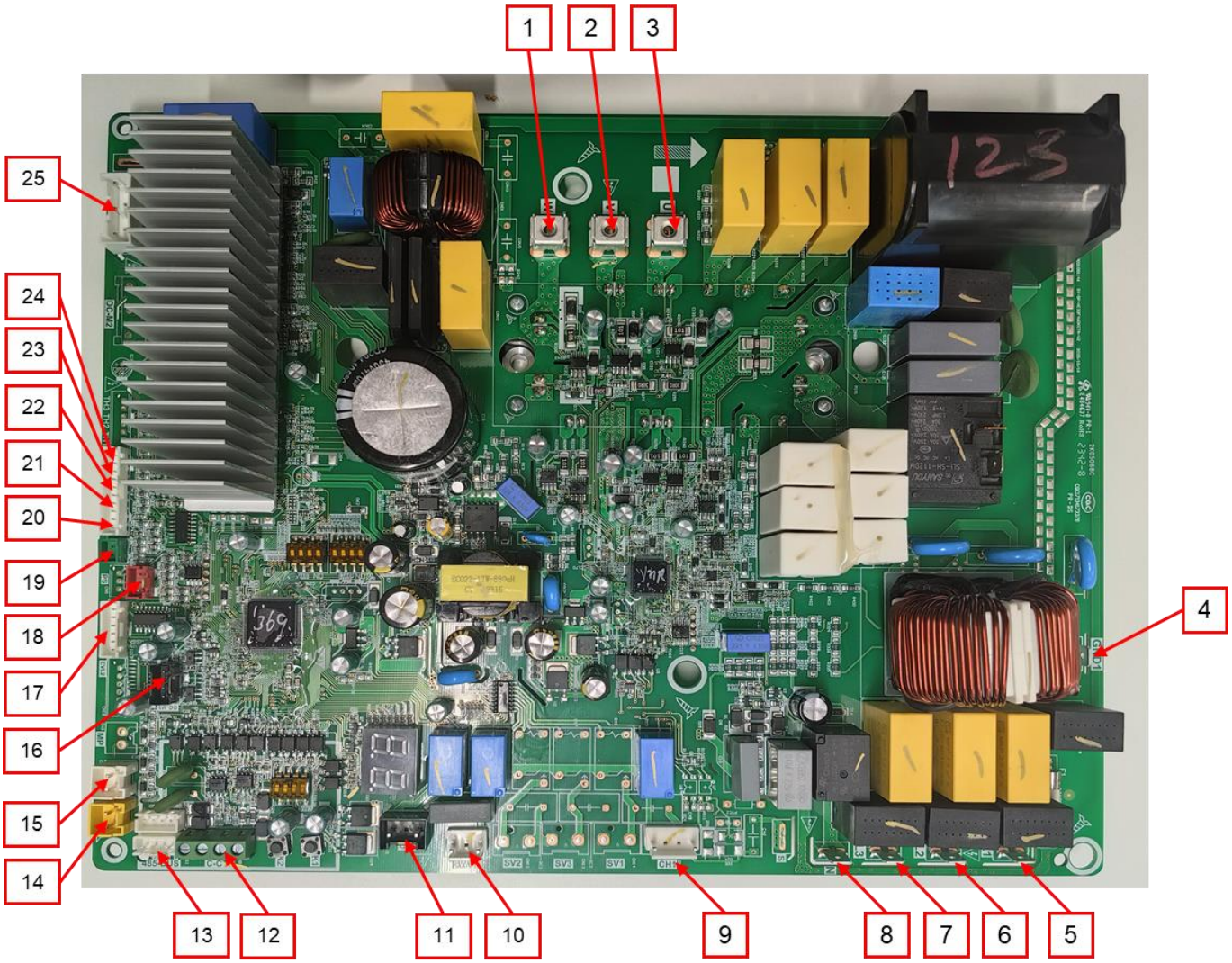

Num.	Remark	Num.	Remark
1	Compressor-W	14	High pressure switch
2	Compressor-V	15	Low pressure switch
3	Compressor-U	16	DC fan
4	GND1	17	EXV
5	L1	18	High pressure sensor
6	L2	19	Electric control box radiator temperature sensor (TRD)
7	L3	20	Outdoor ambient temperature sensor (TAO)
8	N	21	Suction temperature sensor (TS)
9	Oil heater	22	Defrost temperature sensor (TDEF)
10	4-way valve	23	Mid coil temperature sensor (TCM)
11	Chassis heater	24	Discharge temperature sensor (TD)
12	Central control port	25	DC motor
13	Water system communication		

12.2.3 ACHP-H08/4R2HA-M；ACHP-H10/4R2HA-M；ACHP-H12/4R2HA-M；ACHP-H12/4R2HA-M(NE)；ACHP-H14/4R2HA-M；ACHP-H14/4R2HA-M(NE)；ACHP-H16/4R2HA-M；ACHP-H16/4R2HA-M(NE)

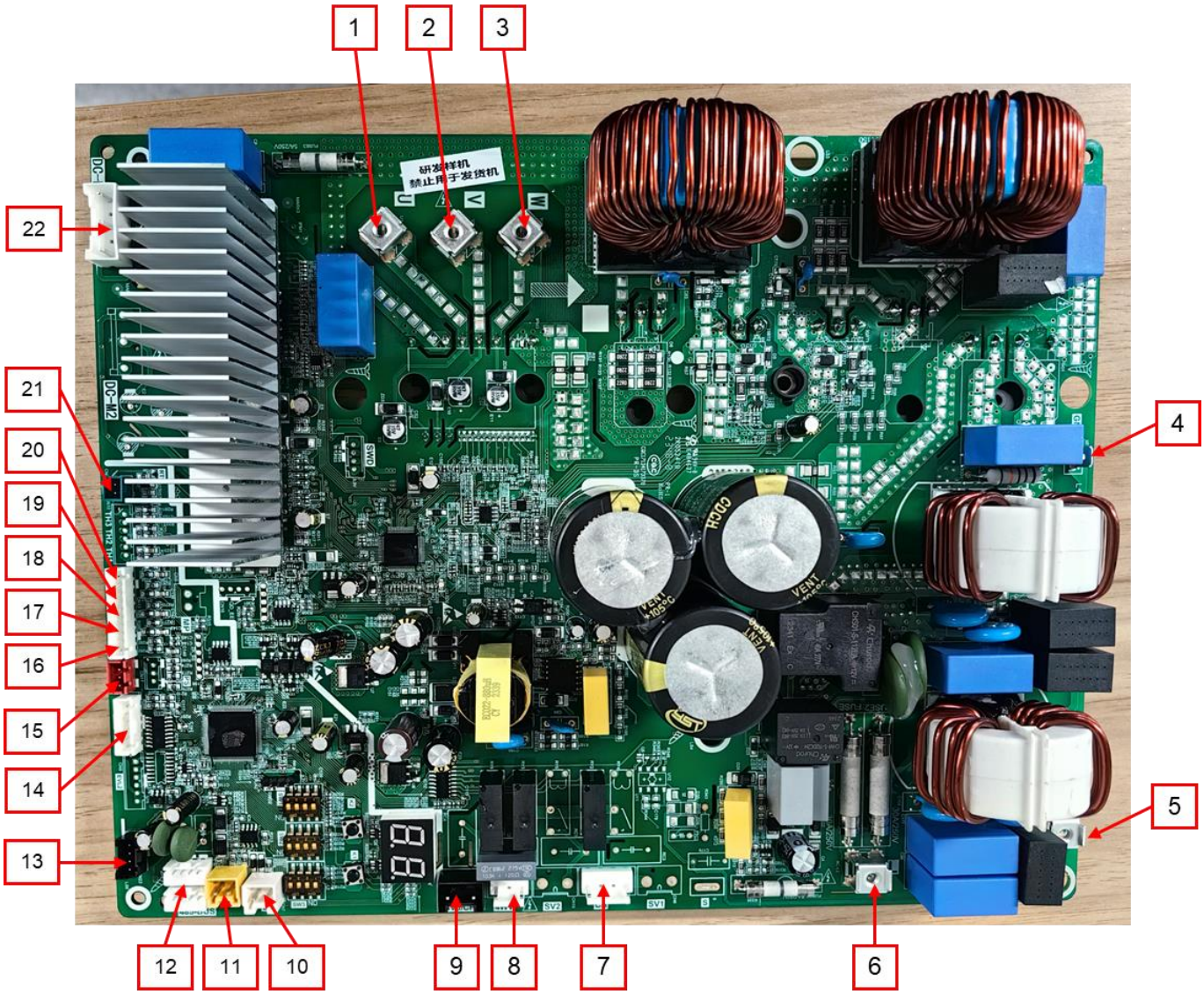

Num.	Remark	Num.	Remark
1	Compressor-W	12	Water system communication
2	Compressor-V	13	DC fan
3	Compressor-U	14	EXV
4	GND1	15	High pressure sensor
5	L	16	Discharge temperature sensor (TD)
6	N	17	Mid coil temperature sensor (TCM)
7	Chassis heater	18	Defrost temperature sensor (TDEF)
8	4-way valve	19	Suction temperature sensor (TS)
9	Oil heater	20	Outdoor ambient temperature sensor (TAO)
10	Low pressure switch	21	Electric control box radiator temperature sensor (TRD)
11	High pressure switch	22	DC motor

Part 13 Drain Hole

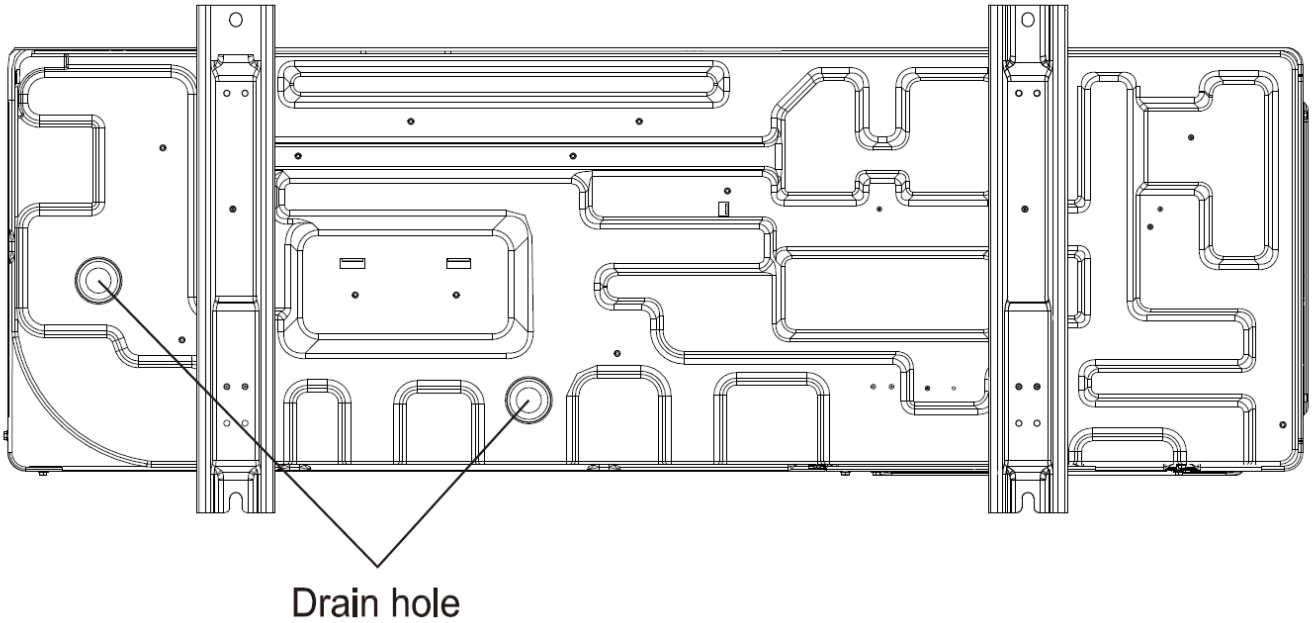

Note:

The user can reserve one hole according to the installation situation, and the other is blocked by the rubber plug in the attachment

It's necessary to install an electrical heating belt if water can't drain out in cold weather even the big drain hole has opened.

Part 14 Trouble Shooting

14.1 Error Code Table

Refrigerant system fault	
CODE	**Fault code description**
B1(H1)	High pressure switch fault
B4(H4)	Low pressure switch fault
BE(HE)	Unit AC input voltage is too high protection
C1	Outdoor ambient temperature sensor fault
C2	Defrost temperature sensor fault
C3	Discharge temperature sensor fault
C6	Suction temperature sensor fault
D2(J2)	Communication fault between refrigerant system and water system
D5(J5)	Outdoor unit number，address，capacity setting fault
D7(J7)	EE fault
E3	Compressor discharge temperature too high protection
E6	Radiator temperature too high protection
E7	Electric control box chamber temperature too high protection
F1	High pressure sensor fault
F3	High pressure too high protection
F5	Radiator temperature sensor fault
F7	Electric control box chamber temperature sensor fault
31	Compressor drive IPM module protection
32	Compressor drive hardware protection
33	Compressor drive software protection
35	Compressor drive over current protection
36	Compressor drive over or low-voltage protection
37	Compressor drive built in temperature sensor fault
38	Compressor drive under phase protection
39	Compressor drive high temperature protection
3A	DC fan motor module high temperature protection
3B(3H)	DC fan motor module turn on failure or out-of-step operation protection
3C	DC fan motor over current protection
3D(3J)	DC fan motor over or low-voltage protection
3E	Compressor drive AC current input protection
3F	Compressor drive PFC module protection
61	Heat dissipation fan fault
Water system fault	
CODE	**Fault code description**
A1	Indoor ambient temperature sensor 1 fault
A3	Refrigerant liquid pipe temperature sensor fault
A4	Refrigerant gas pipe temperature sensor fault
A5	Water pump fault
A7	Water flow switch fault
A9	Communication fault between refrigerant system and water system
AA	Communication fault between wired controller and water system

AE	Different mode operation fault
AF	Electric heating overheat protection
93	Electric heating outlet water temperature sensor fault
94	Inlet water temperature sensor fault
95	Outlet water temperature sensor fault
96	Water tank temperature sensor fault
98	Water flow switch early close fault
79	Floor heating room temperature sensor fault
7A	Communication fault between master unit and slave unit
7B(7H)	Buffer tank 2 temperature sensor fault
7C	Buffer tank 1 temperature sensor fault
7E	Floor heating water temperature sensor fault
7F	Solar water temperature sensor fault

Note：

Description of double fault codes：Since the LED display on ODU's PCB cannot distinguish between capital D and 0, capital B and 8, so, D will be replaced by J on the LED light board, and B will be replaced by H.

It still displays normally on the wire controller and monitoring software

Please refer to the Maintenance manual for more information

Technology leads Intelligent life

NINGBO AUX ELECTRIC CO., LTD

Web: Http://auxcac.cn

Tel:+86-574-88220564

E-mail: auxcac@mail.auxgroup.com

Add: NO. 1166 North Ming guang Road, Jiang shan, Ningbo, Zhejiang, PR. China

The above designs and specifications are subject to charge without prior notice. Final specifications please refer to latest technical specification provided by sales representative.

201810 Technical Support Department

Updated record

Time	Version	Name	Content
2023/10/30	1	Choy	Added the technical manual
2024/07/01	2	Choy	Corrigendum